Panasonic

Service Manual

Stereo System SC-TM760

Colour (S)... Silver Type

MODEL	UNIT	
SC-TM760	SA-TM760 SB-TM760	Stereo Front Speaker

SB-TM760

SB-TM760

SA-TM760

Specifications

POTENCIA DE SALIDA (AMPLIFICADOR)		
SC-TM760	Frontal (Alto)	110 W RCM por canal (3Ω) 1kHz, 10% DAT
	(Bajo)	110 W RCM por canal (3Ω) 100Hz, 10% DAT

UNIDAD PRINCIPAL	SA-TM760
POTENCIA DE SALIDA:	5200 W (P.M.P.O.)
CONSUMO DE POTENCIA:	270 W
ALIMENTACION:	127 V ca ±10% 60 Hz
SENSIBILIDAD AUX:	250 mV
SENSIBILIDAD MUSIC PORT:	100 mV
RANGO DE SINTONIA AM:	520 - 1710 kHz (paso de 10 kHz)
RANGO DE SINTONIA FM:	87.9 - 107.9 MHz (paso de 0,2 MHz) 87.5 - 108.0 MHz (paso de 0,1 MHz)
DIMENSIONES (b x h x l)	250 mm x 330 mm x 348 mm
PESO:	5.4 kg aprox.

ESPECIFICACIONES POR CADA BAFLE	
	FRONTAL
	SB-TM760
IMPEDANCIA DE ENTRADA	Alto 3 Ω, Bajo 3 Ω
Bocina Super Woofer Bocina Woofer Bocina Tweeter Super Tweeter	20 cm 12 cm 6 cm
Dimensiones (b x h x l)	250 mm x 429 mm x 318.5 mm
Peso	6.2 kg aprox.

(El peso y las dimensiones son de un solo bafle)

1 Safety Precautions

1.1. General Guidelines

1. When servicing, observe the original lead dress. If a short circuit is found, replace all parts which have been overheated or damaged by the short circuit.
2. After servicing, see to it that all the protective devices such as insulation barriers, insulation papers shields are properly installed.
3. After servicing, make the following leakage current checks to prevent the customer from being exposed to shock hazards.

1.1.1. Leakage Current Cold Check

1. Unplug the AC cord and connect a jumper between the two prongs on the plug.
2. Measure the resistance value, with an ohmmeter, between the jumpered AC plug and each exposed metallic cabinet part on the equipment such as screwheads, connectors, control shafts, etc. When the exposed metallic part has a return path to the chassis, the reading should be between 1MΩ and 5.2MΩ.

   When the exposed metal does not have a return path to the chassis, the reading must be ∞ .

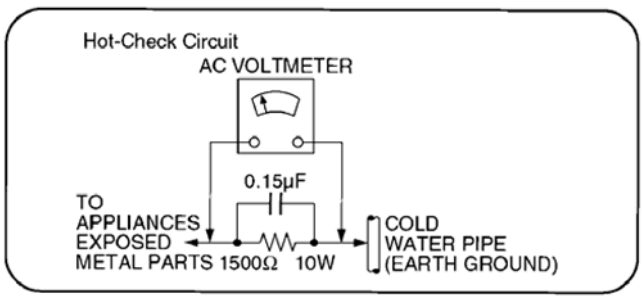

Figure 1

1.1.2. Leakage Current Hot Check (See Figure 1)

1. Plug the AC cord directly into the AC outlet. Do not use an isolation transformer for this check.
2. Connect a 1.5kΩ, 10 watts resistor, in parallel with a 0.15µF capacitor, between each exposed metallic part on the set and a good earth ground such as a water pipe, as shown in Figure 1.
3. Use an AC voltmeter, with 1000 ohms/volt or more sensitivity, to measure the potential across the resistor.
4. Check each exposed metallic part, and measure the voltage at each point.
5. Reverse the AC plug in the AC outlet and repeat each of the above measurements.
6. The potential at any point should not exceed 0.75 volts RMS. A leakage current tester (Simpson Model 229 or equivalent) may be used to make the hot checks, leakage current must not exceed 1/2 milliamp. In case a measurement is out of the limits specified, there is a possibility of a shock hazard, and the equipment should be repaired and rechecked before it is returned to the customer.

1.2. Safety Precaution for AC Power Supply Cord (For GS only)

Note on AC power supply cord (For Saudi Arabia and Kuwait only)

Before use
Remove the connector cover.

How to replace the fuse
The location of the fuse differ according to the type of AC mains plug (figures A and B). Confirm the AC mains plug fitted and follow the instructions below.
Illustrations may differ from actual AC mains plug.

1. Open the fuse cover with a screwdriver.

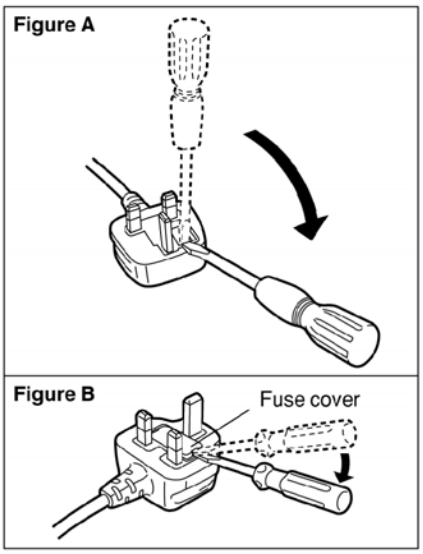

2. Replace the fuse and close or attach the fuse cover.

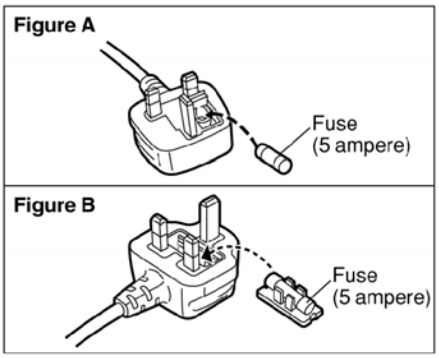

1.3. Before Use (For GS/GCS/GCT only)

Be sure to disconnect the mains cord before adjusting the voltage selector.

Use a minus(-) screwdriver to set the voltage selector (on the rear panel) to the voltage setting for the area in which the unit will be used. (If the power supply in your area is 117V or 127V, set to the “127V” position.)

Note that this unit will be seriously damaged if this setting is not made correctly. (There is no voltage selector for some countries, the correct voltage is already set.)

1.4. Before Repair and Adjustment

Disconnect AC power, discharge Power Supply Capacitors C2254, C2256, C2288, C2289, C2632, C2721, C2725, C2811, C2815, C2817, C5512, C5513, C5514, C5712, C5713, C5715, C5718, C5790, C5805, C5806, C5807, C5914, C5916, C5917, C5929, C5930, C5971 and C5977 through a 10Ω, 5W resistor to ground.

DO NOT SHORT-CIRCUIT DIRECTLY (with a screwdriver blade, for instance), as this may destroy solid state devices.

After repairs are completed, restore power gradually using a variac, to avoid overcurrent.

Current consumption at AC 110 ~ 127V, 50 / 60 Hz & AC 220 ~ 240V, 50 / 60 Hz in NO SIGNAL (vol. min, at CD mode) should be ~500mA. [For GCS/GS/GCT only]

Current consumption at AC 220 ~ 240V, 50 / 60 Hz in NO SIGNAL (vol. min, at CD mode) should be ~500mA . [For GC only]

1.5. Protection Circuitry

The protection circuitry may have operated if either of the following conditions are noticed:

- No sound is heard when the power is turned on.
- Sound stops during a performance.

The function of this circuitry is to prevent circuitry damage if, for example, the positive and negative speaker connection wires are “shorted”, or if speaker systems with an impedance less than the indicated rated impedance of the amplifier are used.

If this occurs, follow the procedure outlines below:

1. Turn off the power.
2. Determine the cause of the problem and correct it.

3. Turn on the power once again after one minute.

Note :

When the protection circuitry functions, the unit will not operate unless the power is first turned off and then on again.

2 Prevention of Electro Static Discharge (ESD) to Electrostatically Sensitive (ES) Devices

Some semiconductor (solid state) devices can be damaged easily by electricity. Such components commonly are called Electrostatically Sensitive (ES) Devices. Examples of typical ES devices are integrated circuits and some field-effect transistors and semiconductor “chip” components. The following techniques should be used to help reduce the incidence of component damage caused by electro static discharge (ESD).

1. Immediately before handling any semiconductor component or semiconductor-equipped assembly, drain off any ESD on your body by touching a known earth ground. Alternatively, obtain and wear a commercially available discharging ESD wrist strap, which should be removed for potential shock reasons prior to applying power to the unit under test.
2. After removing an electrical assembly equipped with ES devices, place the assembly on a conductive surface such as aluminium foil, to prevent electrostatic charge build up or exposure of the assembly.
3. Use only a grounded-tip soldering iron to solder or unsolder ES devices.
4. Use only an anti-static solder remover device. Some solder removal devices not classified as “anti-static (ESD protected)” can generate electrical charge to damage ES devices.
5. Do not use freon-propelled chemicals. These can generate electrical charges sufficient to damage ES devices.
6. Do not remove a replacement ES device from its protective package until immediately before you are ready to install it. (Most replacement ES devices are packaged with leads electrically shorted together by conductive foam, aluminium foil or comparable conductive material).
7. Immediately before removing the protective material from the leads of a replacement ES device, touch the protective material to the chassis or circuit assembly into which the device will be installed.

   Caution

   Be sure no power is applied to the chassis or circuit, and observe all other safety precautions.
8. Minimize body motions when handling unpackaged replacement ES devices. (Otherwise harmless motion such as the brushing together of your clothes fabric or the lifting of your foot from a carpeted floor can generate static electricity (ESD) sufficient to damage an ES device).

IMPORTANT SAFETY NOTICE

There are special components used in this equipment which are imporant for safety.
These parts are marked by ⚠ in the schematic diagrams, Exploded Views and replacement parts list. It is essential that these critical parts should be replaced with manufacturer's specified parts to prevent shock, fire, or other hazards. Do not modify the original design without permission of manufacturer.

3 Handling Precautions for Traverse Unit

The laser diode used inside optical pickup could be destroyed due to static electricity as a potential difference is caused by electrostatic load discharged from clothes or human body. Handling the parts carefully to avoid electrostatic destruction during repair.

3.1. Handling Optical Pickup

1. Do not impact on optical pickup as the unit structurally uses an extremely precise technology.
2. Short-circuit the flexible cable of optical pickup remove from the circuit board using a short-circuit pin or clip in order to prevent laser diode from electrostatic destruction (Refer to Fig. 3.1 and Fig. 3.2)
3. Do not handle flexible cables forcibly as this may cause snapping. Handle the parts carefully (Refer to Fig. 3.1)
4. A new optical pickup is equipped with an anti-static flexible cable. After replacing and connecting to the flexible board, cut the anti-static flexible cable. (Refer to Fig. 3.1)

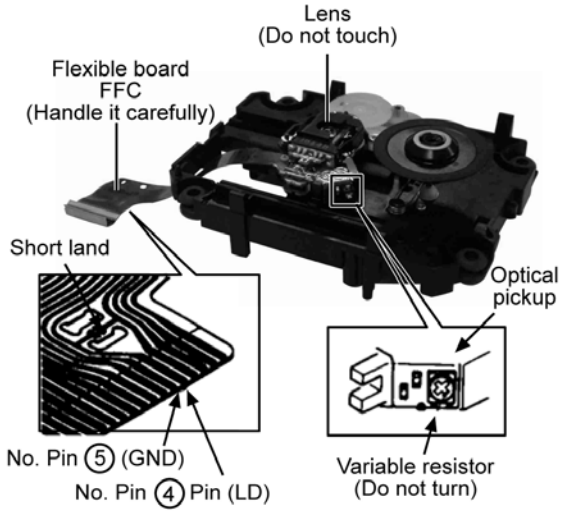

Fig 3.1

3.2. Replacing Precautions for Optical Pickup Unit

CD/DVD Optical Pickup

The optical pickup by which part supply was carried out attaches the short clip to the flexible board for laser diode electrostatic discharge damage prevention. Please remove the short clip and be sure to check that the short land is open, before connecting. (Please remove solder, when the short land short-circuits.)

3.3. Grounding for Preventing Electrostatic Destruction

1. Human body grounding

   Use the anti-static wrist strap to discharge the static electricity accumulated in your body. (Refer to Fig. 3.2)
2. Work place grounding

   Place a conductive material (conductive sheet) or ironboard where optical pickup is placed. (Refer to Fig. 3.2)

Note :

Keep your clothes away from optical pickup as wrist strap does not release the static electricity charged in clothes.

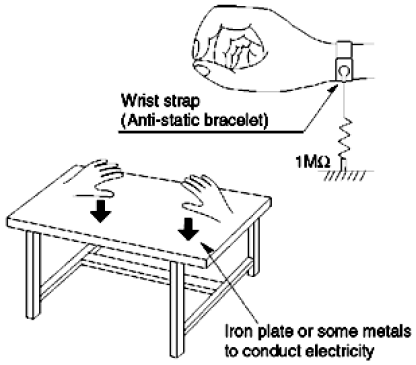

Fig. 3.2

5 Warning

5.1. Service caution based on legal restrictions

5.1.1. General description about Lead Free Solder (PbF)

The lead free solder has been used in the mounting process of all electrical components on the printed circuit boards used for this equipment in considering the globally environmental conservation.

The normal solder is the alloy of tin (Sn) and lead (Pb). On the other hand, the lead free solder is the alloy mainly consists of tin (Sn), silver (Ag) and Copper (Cu), and the melting point of the lead free solder is higher approx.30 degrees C (86°F) more than that of the normal solder.

Definition of PCB Lead Free Solder being used

The letter of “PbF” is printed either foil side or components side on the PCB using the lead free solder. (See right figure)	PbF

Service caution for repair work using Lead Free Solder (PbF)

- The lead free solder has to be used when repairing the equipment for which the lead free solder is used.
  (Definition: The letter of “PbF” is printed on the PCB using the lead free solder.)
- To put lead free solder, it should be well molten and mixed with the original lead free solder.
- Remove the remaining lead free solder on the PCB cleanly for soldering of the new IC.
- Since the melting point of the lead free solder is higher than that of the normal lead solder, it takes the longer time to melt the lead free solder.
- Use the soldering iron (more than 70W) equipped with the temperature control after setting the temperature at 350±30 degrees C (662±86°F).

Recommended Lead Free Solder (Service Parts Route.)

- The following 3 types of lead free solder are available through the service parts route.
  RFKZ03D01K----------(0.3mm 100g Reel)
  RFKZ06D01K----------(0.6mm 100g Reel)
  RFKZ10D01K----------(1.0mm 100g Reel)

Note

* Ingredient: Tin (Sn), 96.5%, Silver (Ag) 3.0%, Copper (Cu) 0.5%, Cobalt (Co) / Germanium (Ge) 0.1 to 0.3%

6 Accessories

☐ Cable de alimentación de CA SJA168-1A

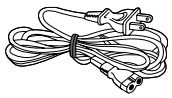

☐ Pilas para el mando a distancia UM-3PA/T

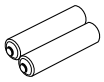

☐ Antena interior de FM RSA0007-L

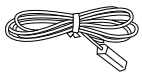

☐ Antena de cuadro de AM ND1AAAA00002

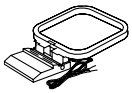

☐ Mando a distancia N2QAHB000058

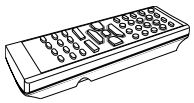

☐ Plug para RCA/ Jack 3.5 ..... KM19201-01

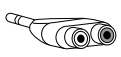

Unidad principal

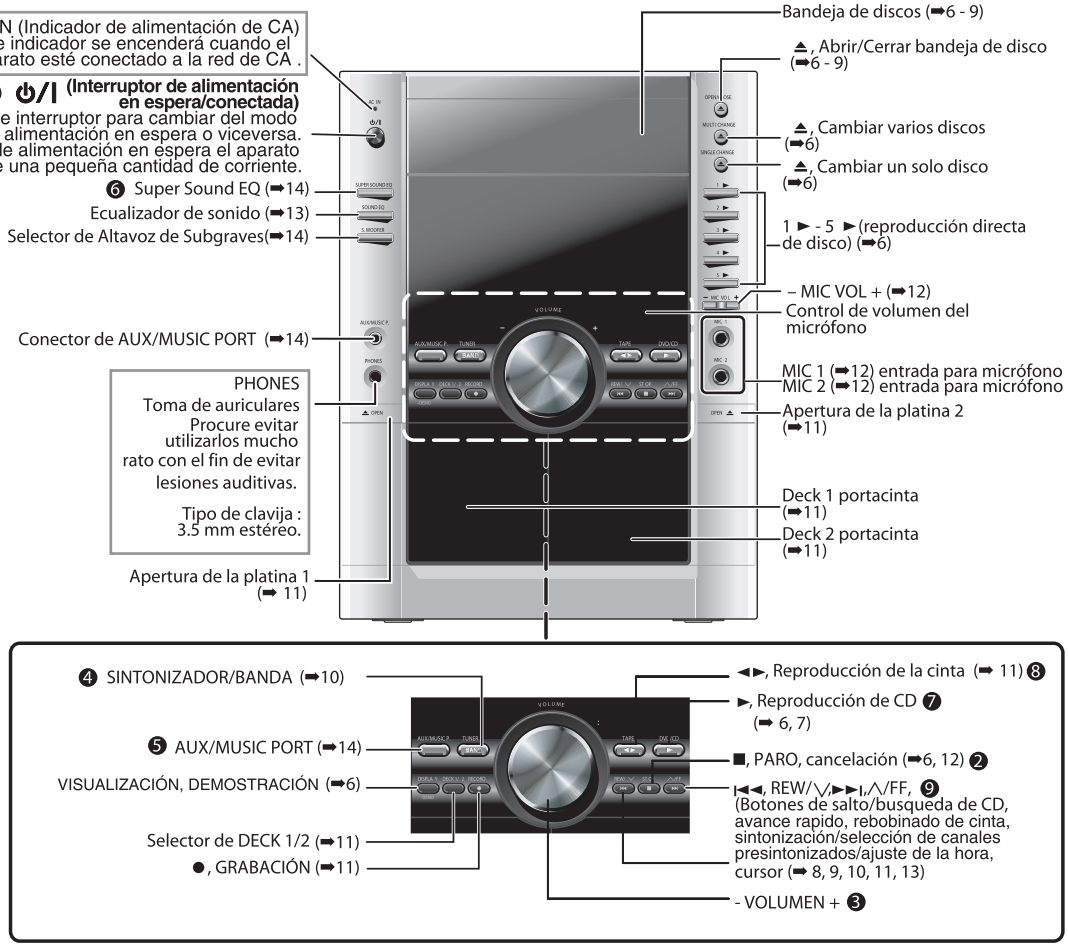

Mando a distancia

Los botones como el ❶ funcionan del mismo modo que los botones del aparato principal.

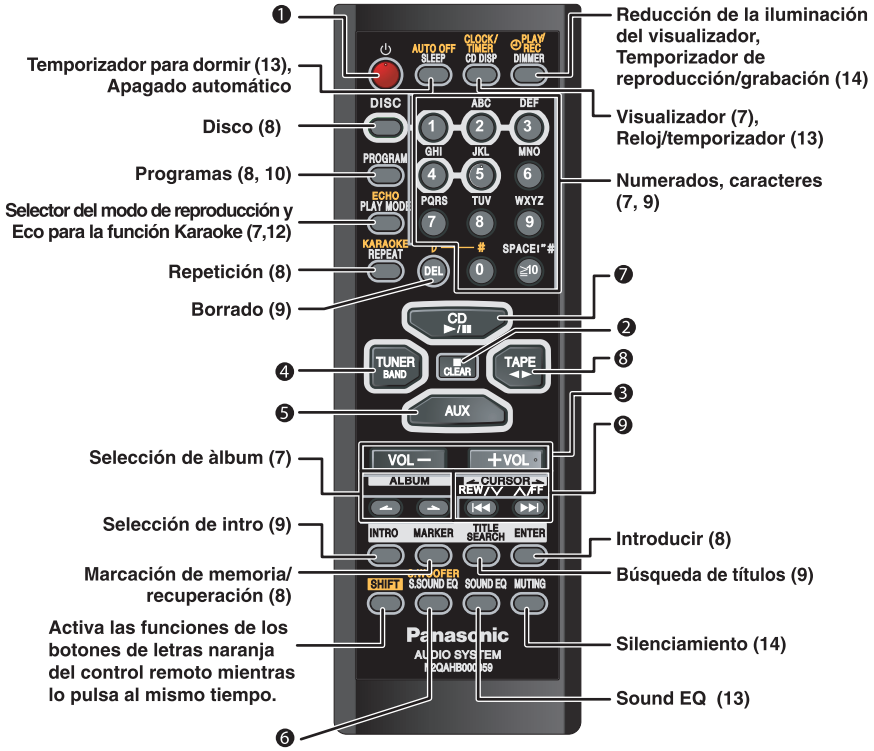

AUTO OFF SLEEP

Esta función de apagado automático le permite apagar el aparato en modo **disco o cinta**, sólo después de 10 minutos sin utilizarlo.

- Mantenga pulsado [–AUTO OFF] para activar esta función.
- Mantenga pulsado [–AUTO OFF] de nuevo para cancelar.
- El ajuste se mantiene aunque el aparato esté apagado.

–PLAY/ REC DIMMER

Para reducir la iluminación del visualizador.

MUTING

Para silenciar el sonido.

- Pulse el botón para activarlo.
- Vuélvalo a pulsar para cancelar.

8 New Features

8.1. CRS1D Mechanism Overview

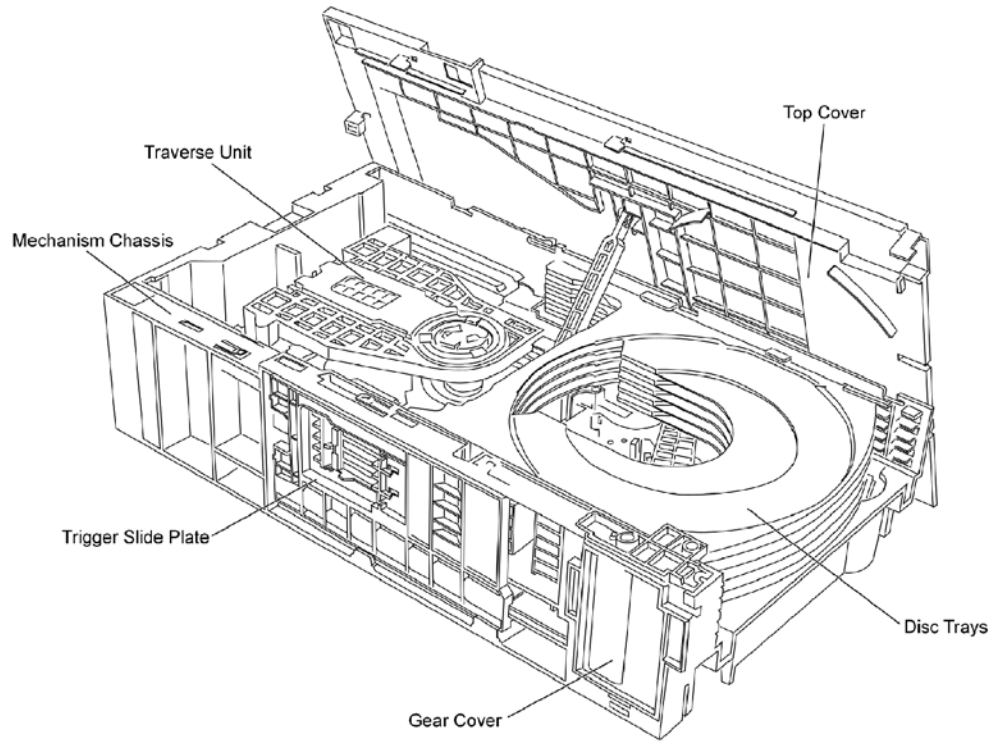

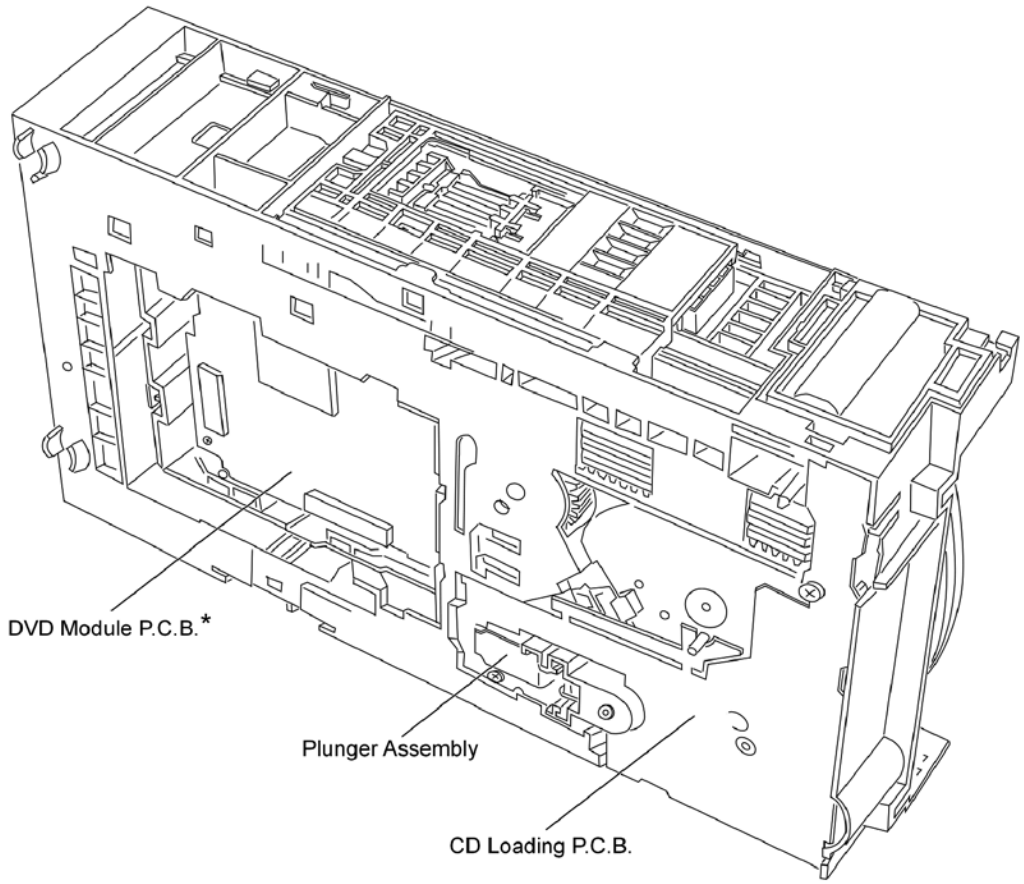

* Illustration for DVD Module P.C.B. (Applied models: VK450/650/750/850/950)

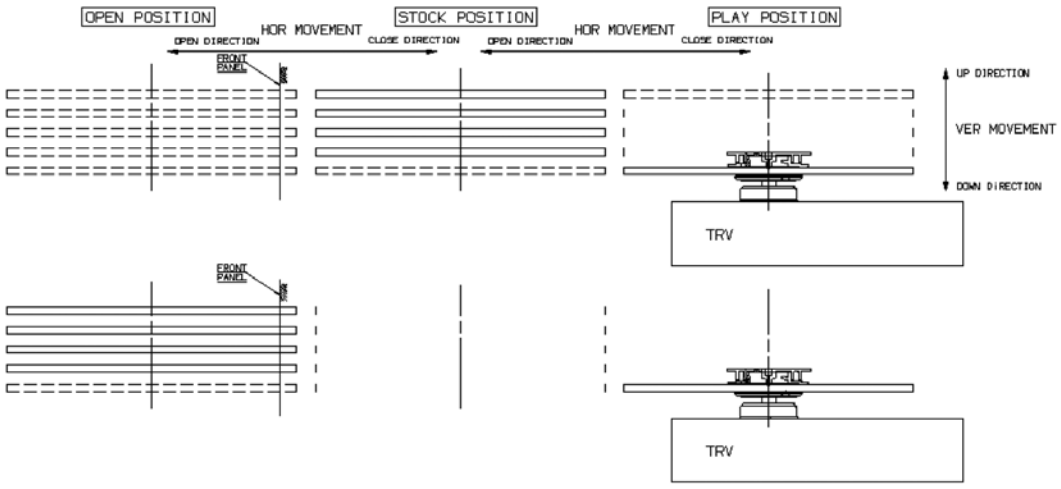

- The mechanism has **"CHANGE WHILE PLAY"** function. It open other trays for disc exchanging while one tray is at PLAY position performing recording or reproducing.
- The mechanism can quickly change all trays with **"CHANGE ALL"** function. All trays can be move to OPEN position with one operation.
- There is no sensor to indicate presence of disc on any tray.

Hardware composition

- Below is the hardware components of the mechanism

Name	Function
Open Switch (OPEN-SW)	The switch is used to detect normal tray opening
	The switch is used for detect tray being manually push/trigger when full open
Home Switch (HOME-SW)	Is used to detect cam gear home position
Close Sensor (CLOSE-SENSOR)	Used for normal single tray closing
	Used to detect cam gear rotate to Play Driving position
Play Switch (PLAY-SW)	Detect TRV clamping complete position
Stocking Switch (STOCK-SW)	Detect tray completely transfer for play position to stocking position
UD Sensor (UD-SENSOR)	Detect TRV vertical movement position
Top Switch (TOP-SW)	Detect a default position of TRV vertical movement position
Driver IC	To drive Motor
Motor	Main driving source for changer
Plunger	Switching the driving source from motor to: 1. Tray open/close 2. Drive tray to play/stock position and TRV vertical movement

Mechanism Operation

- This mechanism has the following state:
  1. Driving of a tray to open/close
  2. Up/down operation of a traverse performs a state changes of tray.

  By using the plunger to lift/release of a switching gear, and the cam gear to lift/release the function gear the motor can be link to several gear trains to perform various operations.
- The functions that can be perform in this mechanism are described as below:

Condition	Explanation
Open current playing tray	The state to change current playing disc. All tray will be open at once and current tray at PLAY position will be expose.
Open All	The state where all trays being driven to OPEN position. The disc can be taken in or out from tray to tray by close tray one by one from top to bottom.
Stock	The state where the trays are stored in STOCK position
Play	The state where one of the tray 5 trays is being driven to PLAY position and clamped by traverse unit
Play & Open Tray-*	The state where one of the tray is in playing position performing recording or reproducing, other trays can be used (OPEN position) for disc exchanging without stopping the recording or reproducing process.
Change	The state when one of the opened tray being driven from OPEN position to STOCK position and other opened trays remain still at OPEN position.
Close All	The state where all open trays will being driven from OPEN position to STOCK position, one by one from top to bottom

Condition	Explanation
Change	The state when one of the opened tray being driven from OPEN position to STOCK position and other opened trays remain still at OPEN position.
Close All	The state where all open trays will being driven from OPEN position to STOCK position, one by one from top to bottom

Note: * represent tray number (from 1 ~ 5)

8.1.4. New CD Mechanism (CRS1D)

Note:

This service manual does not contain the following information for the mention CD/DVD Mechanism drive:

- Schematic Diagram, Block Diagram and P.C.B. layout of CD/DVD Loading P.C.B.
- Part List for individual parts of the mechanism.
- Exploded View and Parts List for individual parts of the CD/DVD Mechanism drive.

Please refer to the original service manual (Order No. MD0603065A3) for the CD/DVD Mechanism Drive CRS1D.

8.2. Music Port

You can playback sound from portable audio equipment.
Sound from the speaker may be distorted if the portable audio equipment's equalizer (if any) is turned on. Turn it off before you plug into the MUSIC PORT jack.

Play

1 Connect the portable audio equipment.
Plug type: 3.5 mm stereo

Portable audio equipment

2 Press [TUNER/MUSIC P.]. (main unit: [MUSIC PORT])
The unit comes on.
Every time you press the button:
FM → AM → **MUSIC P.** → AUX

3 Play the portable audio equipment.
(For details, refer to the external unit's instruction manual.)

Recording

Recording preparation.

1 Press [TUNER/MUSIC P.]
2 Press [●, RECORD] on the main unit to start recording.
3 Play the portable audio equipment.

With reference to page 31 of the operating instruction manual.

9 Self diagnosis and special mode setting

This unit is equipped with functions for checking and inspecting namely: Self-Diagnostic and Test Mode.

9.1. Special Mode Table

Item		FL Display	Key Operation
Mode Name	Description		Front Key
Self -Diagnostic Mode	To enter into self diagnostic checking for main unit.	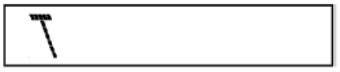	1. Select [►, TAPE] for TAPE mode (Ensure no tape is inserted). 2. Press and hold [■, STOP]button for 3 seconds follow by [►►I, ∧/FF]. To exit, press [⏻/I, POWER] button on main unit or remote control.
CD Test Mode	To enter into checking the reliability of changer unit.		1. Select [►/II, CD] for CD mode. 2. Press and hold [■, STOP] button for 3 seconds follow by [►►I, ∧/FF]. To exit, press [⏻/I, POWER] button on main unit or remote control.
CD Auto Adjustment	To check the CD auto adjustment result for FLOCK, TLOCK and CLVS.	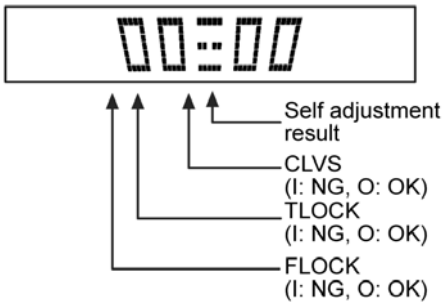	In CD Test Mode: 1. Press [0] button on the remote control. To exit, press [⏻/I, POWER] button on main unit or remote control.
CD Changer Reliability Test (CRS1)	To determine the reliability of CD Changer Unit. (For more information, refer to section 9.1.1)	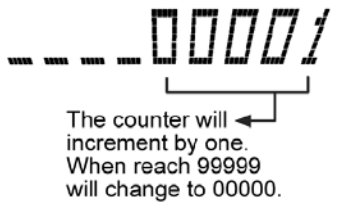	In Self-Diagnostic Mode: 1. Select [►/II, CD] for CD mode. 2. Press [I◄◄, REW/∨] button. To exit, press [⏻/I, POWER] button on main unit or remote control. (The tray will return to PLAY position and then power off)
Doctor Mode	To enter into Doctor Mode for checking of various items and displaying EEPROM and firmware version.	1. 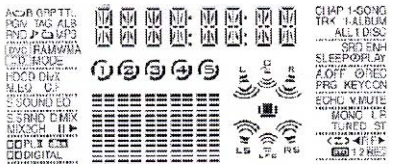 2. 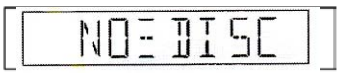 1. All segments will light up for 1 second. 2. The Check Sum of EEPROM and firmware version will be display. * ROM correction ** Firmware version No:	In any mode: 1. Press [■, STOP] button on main unit follow by [4] and [7] on remote control. To exit, press [ENTER] button on remote control or [⏻/I, POWER] button on main unit or remote control.
Cold Start	To activate cold start upon next AC power up.	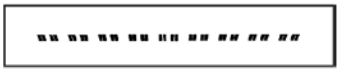	In doctor mode: 1. Press [4] button on remote control. To exit, press [ENTER] button on remote control or [⏻/I, POWER] button on main unit or remote control.
Changer Reliability Test	To check the function operation of changer unit. (For more information, refer to 9.1.1)	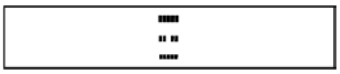	In doctor mode: 1. Press [DISC] on remote control. To exit, press [ENTER] button on remote control or [⏻/I, POWER] button on main unit or remote control.

Item		FL Display	Key Operation
Mode Name	Description		Front Key
FL Display Test	To check the FL segments display (All segments will light up and LED will blink at 0.5 second interval)	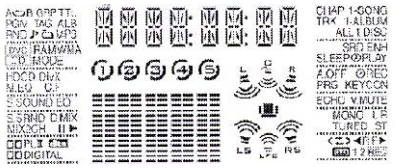	In doctor mode: 1. Press [DIMMER] button on remote control.
Tape Eject Test	To check on the tape eject function (For deck 1/2)		In doctor mode: 1. Press [PROGRAM] button on remote control.

9.1.1. CD changer unit ageing test mode

Below is the process flow chart of ageing for the CD changer unit. (CRS1)

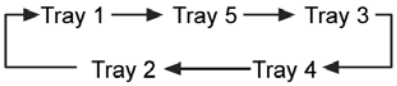

Mode 3 PLAY-CHANGE-OPEN mode aging (1 cycle)

CHANGE while PLAY 1

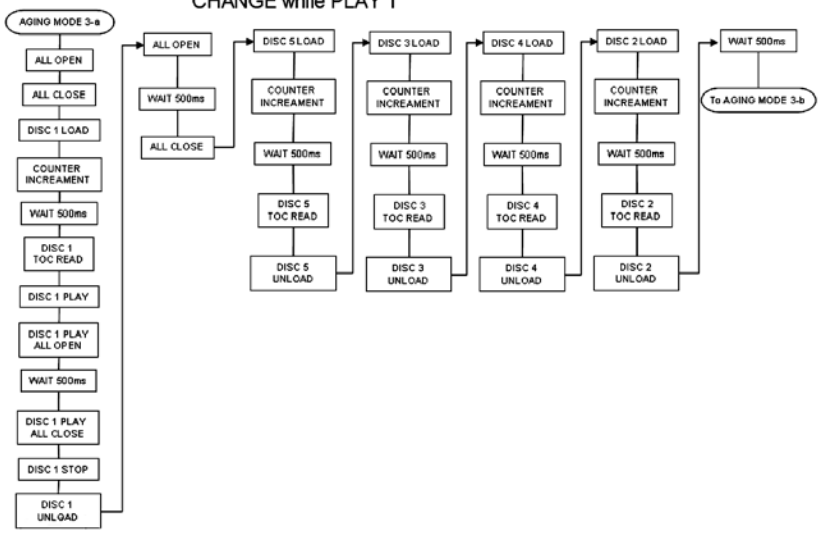

Mode 3 PLAY-CHANGE-OPEN mode aging (1 cycle)

CHANGE while PLAY 5

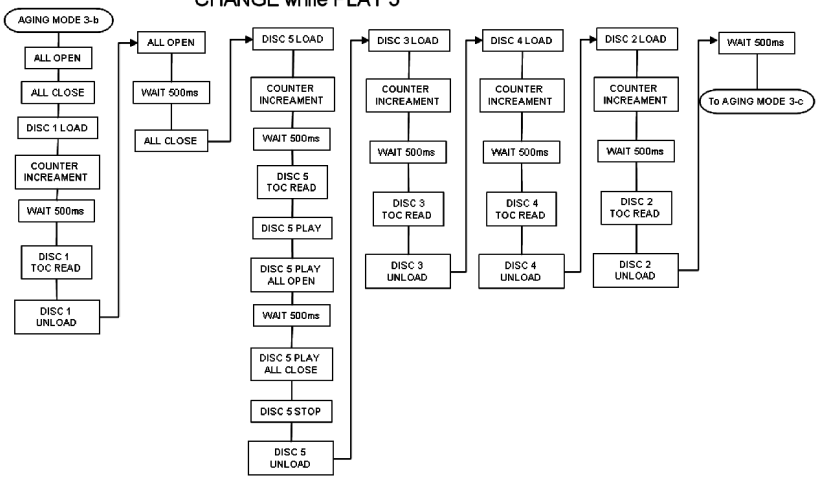

Mode 3 PLAY-CHANGE-OPEN mode aging (1 cycle)

CHANGE while PLAY 3

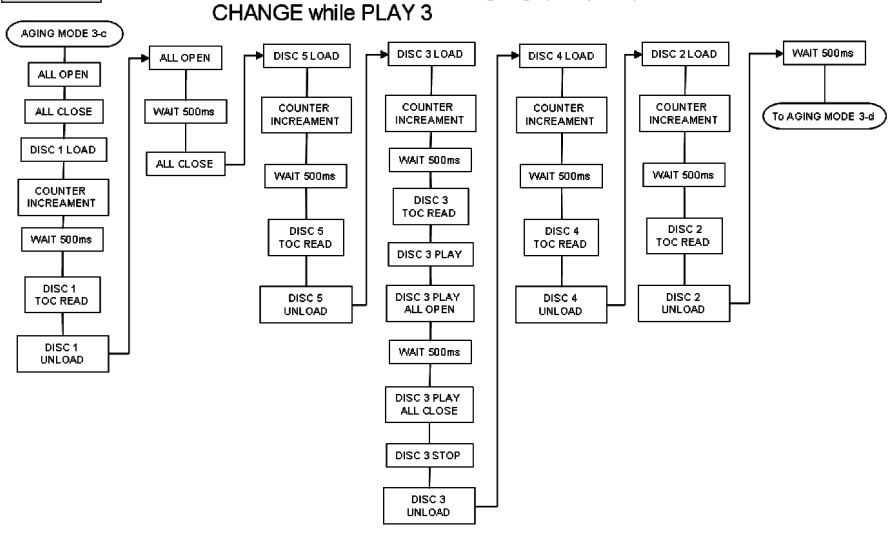

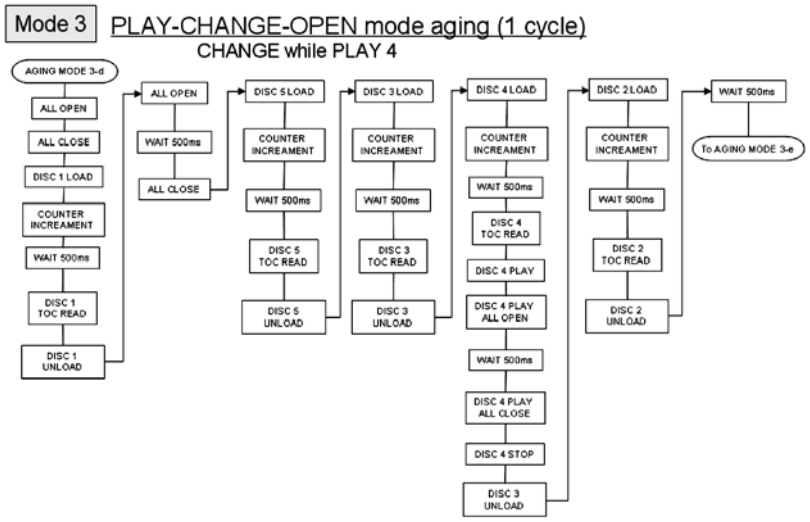

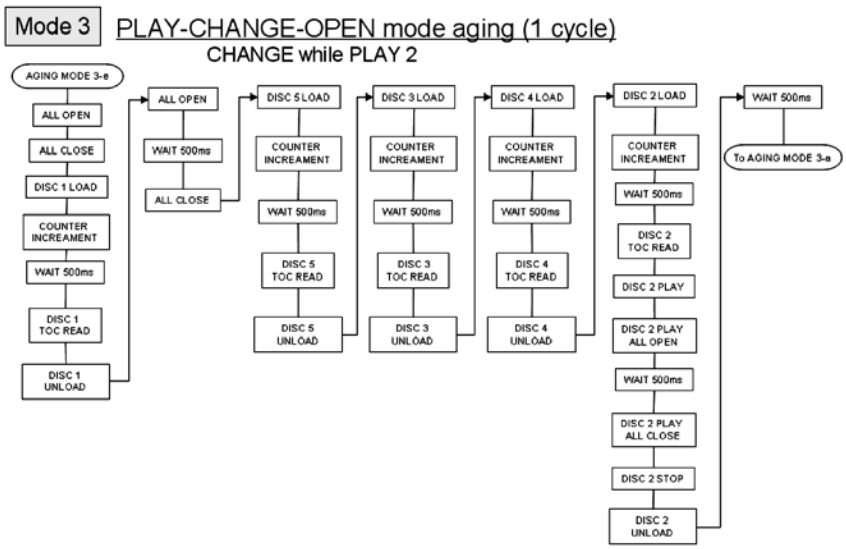

10 Error Code Table

Self-Diagnosis Function (refer Section 10.3) provides information on any problems occuring for the unit and its respective components by displaying the error codes. These error code such as U**, H** and F** are stored in memory and held unless it is cleared.

The error code is automatically display after entering into self-diagnostic mode.

The error code is automatically display after entering into self-diagnostic mode.

Error Code	Diagnosis Contents	Description of error	Automatic FL Display	Remarks
H01	Mode SW, plunger and capstan motor abnormal			For deck mechanism unit (For deck 1/2). Press [■, STOP] on main unit for next error.
H02	Rec INH SW abnormal		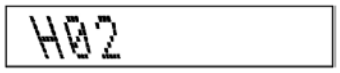	For deck mechanism unit (For deck 2). Press [■, STOP] on main unit for next error.
H03	HALF SW abnormal		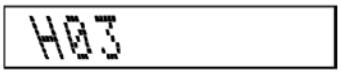	For deck mechanism unit (For deck 1/2). Press [■, STOP] on main unit for next error.
F01 F02	Reel pulse abnormal TPS error		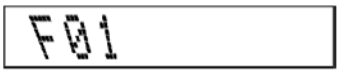 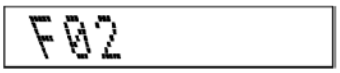	For deck mechanism unit (For deck 1/2). Press [■, STOP] on main unit for next error.
F15	RESET SW abnormal	REST SW: ON is not detected within the specified time.		For CD unit (For Traverse). Press [■, STOP] on main unit for next error.
F26	Transmission error between CD Servo LSI IC and microprocessor IC	When set to CD mode, the sense signal does not turn “Low”, a fail safe time after system command transmission is sent.		For CD unit (For Traverse). Press [■, STOP] on main unit for next error.
F61	Power Amp IC output abnormal	Upon power on, PCONT=HIGH, DCDET=L after checking LSI.		For power. Press [■, STOP] on main unit for next error.
IHMS	Cam gear abnormality	Cam gear does not rotate to “HOME” position.	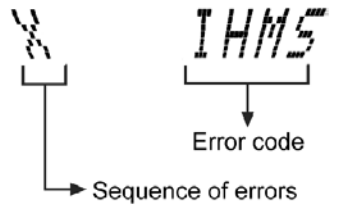	For CD changer unit (CRS1). Press [SINGLE CHANGE] on main unit for next error.
ICSL	Cam gear/gear units abnormal	Cam gear does not rotate to “PLAY” driving position and hence does not drive playing tray to “STOCK” position.	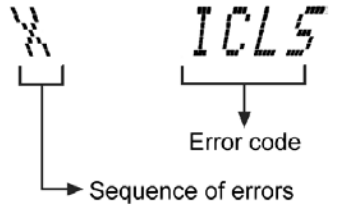	For CD changer unit (CRS1). Press [SINGLE CHANGE] on main unit for next error.
ISTK	Drive rack/gear assembly abnormal	The tray drive rack does not move to “STOCK” position. (Tray does not move to “STOCK” position)	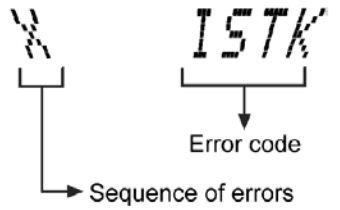	For CD changer unit (CRS1). Press [SINGLE CHANGE] on main unit for next error.
IPLY	Drive rack/gear assembly abnormal	The tray drive rack does not move to “PLAY” position. (Tray does not move to “PLAY” position)	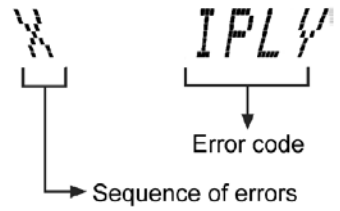	For CD changer unit (CRS1). Press [SINGLE CHANGE] on main unit for next error.

Error Code	Diagnosis Contents	Description of error	Automatic FL Display	Remarks
ITOP	UD assembly	UD Rack does not move to front direction. This lead to UD base not raise to top position.	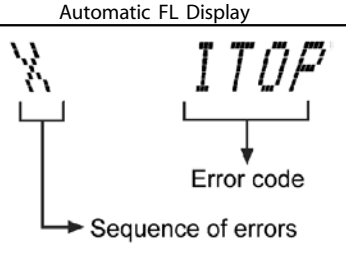	For CD changer unit (CRS1). Press [SINGLE CHANGE] on main unit for next error.
IUDS	UD assembly	After TOP SW is detected, UD rack does not move into tray 1 position.	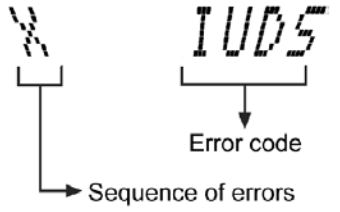	For CD changer unit (CRS1). Press [SINGLE CHANGE] on main unit for next error.
HOME	Cam gear/gear assembly abnormal	Cam gear does not move to "HOME" position under following conditions 1. After tray is load to "PLAY" position. 2. After tray is unload to "STOCK" position.	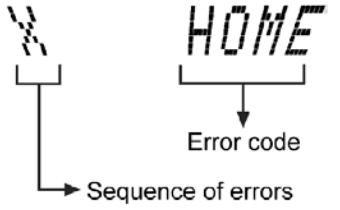	For CD changer unit (CRS1). Press [SINGLE CHANGE] on main unit for next error.
LOAD	Tray drive assembly abnormal	Tray unit does not move from "STOCK" to "PLAY" position	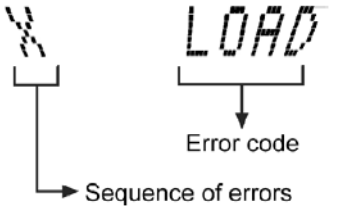	For CD changer unit (CRS1). Press [SINGLE CHANGE] on main unit for next error.
PDRV	Cam gear/gear assembly abnormal	Cam gear does not move from "HOME" to "PLAY" drive position.	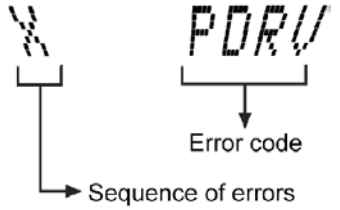	For CD changer unit (CRS1). Press [SINGLE CHANGE] on main unit for next error.
UDU	UD base asssembly abnormal	UD Base assembly does not move upwards from tray 5 to tray 2		For CD changer unit (CRS1). Press [SINGLE CHANGE] on main unit for next error.
UDD	UD base asssembly abnormal	UD Base assembly does not move downwards from tray 1 to tray 5.		For CD changer unit (CRS1). Press [SINGLE CHANGE] on main unit for next error.
UD1	UD base asssembly abnormal	UD Base assembly does not move to tray 1.	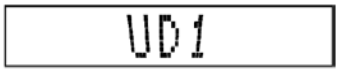	For CD changer unit (CRS1). Press [SINGLE CHANGE] on main unit for next error.
F1NG	Fail - safe mode. (For open/close tray unit(s))	When the tray open operation is performed, it fails to open. It will automatically close all trays after the time-out by the microprocessor. During this time when it fails, the error code will appear.	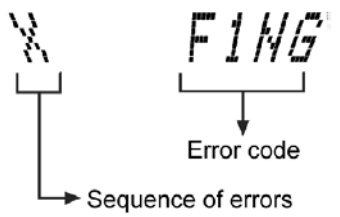	For CD changer unit (CRS1). Press [SINGLE CHANGE] on main unit for next error.
F2NG	Fail - safe mode. (For open/close tray unit(s))	When the tray close operation is performed, it fails to close. It will automatically open all trays after the time-out by the microprocessor. During this time when it fails, the error code will appear.	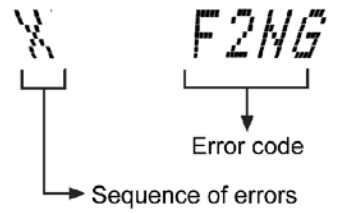	For CD changer unit (CRS1). Press [SINGLE CHANGE] on main unit for next error.

Error Code	Diagnosis Contents	Description of error	Automatic FL Display	Remarks
SRVC_TRV	To unlock the traverse unit for service	1. All trays set to "STOCK" position 2. Mechanism set to tray 5 3. Cam gear set to "HOME" position	SRVC TRV	For CD changer unit (CRS1). Press [SINGLE CHANGE] on main unit.
RSET	Cam gear jam/close sensor faulty	During tray re-open, the cam gear will rotate in the opposite direction to reset the cam gearposition. When it fails, the error code will appear.	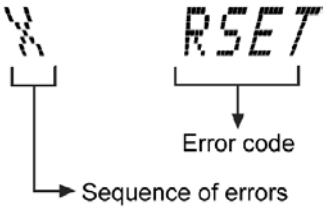	For CD changer unit (CRS1). Press [SINGLE CHANGE] on main unit for next error.

CRS1 Error Code display

1. The errors that occured in CRS1 Mechanism can be recalled and displayed, in the order of the occurence under self-diagnostic (Refer to Section 9.1 for procedures to enter this mode.
   · Only the first 5 errors will be memorized (in backup memory). The subsequence error shall be ignored and not memorize.
   For system with EEPROM as memory backup,memory space in EEPROM is neccesary.
2. To display all error code memorized
   In CRS1 Self-Diagnostic mode, press [SINGLE CHANGE] to display subsequence error code.
   It shall repeat after reaching error no. 5.
   e.g.:
   [1 _ _ _ _ I H M S] → [SINGLE CHANGE]
   [2 _ _ _ _ I T O P] → [SINGLE CHANGE]
   [3 _ _ _ _ H O M E] → [SINGLE CHANGE]
   [4 _ _ _ _ L O A D] → [SINGLE CHANGE]
   [5 _ _ _ _ _ U D D] → [SINGLE CHANGE]
3. To clear the error code memory
   In CRS1 Self-Diagnostic mode, long press [SINGLE CHANGE] key (2s or more)

11 Assembling and Disassembling

11.1. Caution

Special Note:

This model uses a new CD changer unit CRS1D. In this following section does not contain the necessary disassembly & assembly information for the CD changer unit (CRS1D) except the disasembly & assembly of traverse unit. Kindly refer to the original service manual for the CD changer unit. (Order No. MD0603065A3).

"ATTENTION SERVICER"

Some chassis components may have sharp edges. Be careful when disassembling and servicing.

1. This section describes procedures for checking the operation of the major printed circuit boards and replacing the main components.
2. For reassembly after operation checks or replacement, reverse the respective procedures.
   Special reassembly procedures are described only when required.
3. Select items from the following index when checks or replacement are required.
4. Refer to the Parts No. on the page of "Parts Location and Replacement Parts List" (Section 25), if necessary.

Warning :-

This product uses a laser diode. Refer to caution statement Precaution of Laser Diode.

Caution:

After replacing of CD/DVD Changer Unit, ageing test is necessary. Please confirm operation for CD/DVD Changer Unit.

Caution:
Original screws should be used.

Below is the list of disassembly sections

- **Disassembly of Top Cabinet**
- **Disassembly of CD Changer Unit**
- **Disassembly of Rear Panel**
- **Disassembly of Main P.C.B.**
- **Disassembly of Front Panel Unit**
- **Disassembly of SMPS P.C.B.**
- **Replacement of Power Amp IC (SMPS P.C.B.)**
- **Disassembly of Digital Amp P.C.B.**
- **Replacement for Power Amp IC (Digital Amp P.C.B.)**
- **Disassembly of Panel P.C.B., Mic P.C.B. & Tact Switch P.C.B.**
- **Disassembly of Deck Mechanism Unit**
- **Disassembly for Deck P.C.B.**
- **Disassembly of Traverse Unit**
- **Disassembly of Optical Pickup Unit (CD Mechanism)**
- **Disassembly of Deck Mechanism**
- **Replacement for cassette lid**
- **Rectification for tape jam problem**

11.2. Disassembly flow chart

The following chart is the procedure for disassembling the casing and inside parts for internal inspection when carrying out the servicing.

To assemble the unit, reverse the steps shown in the chart as below.

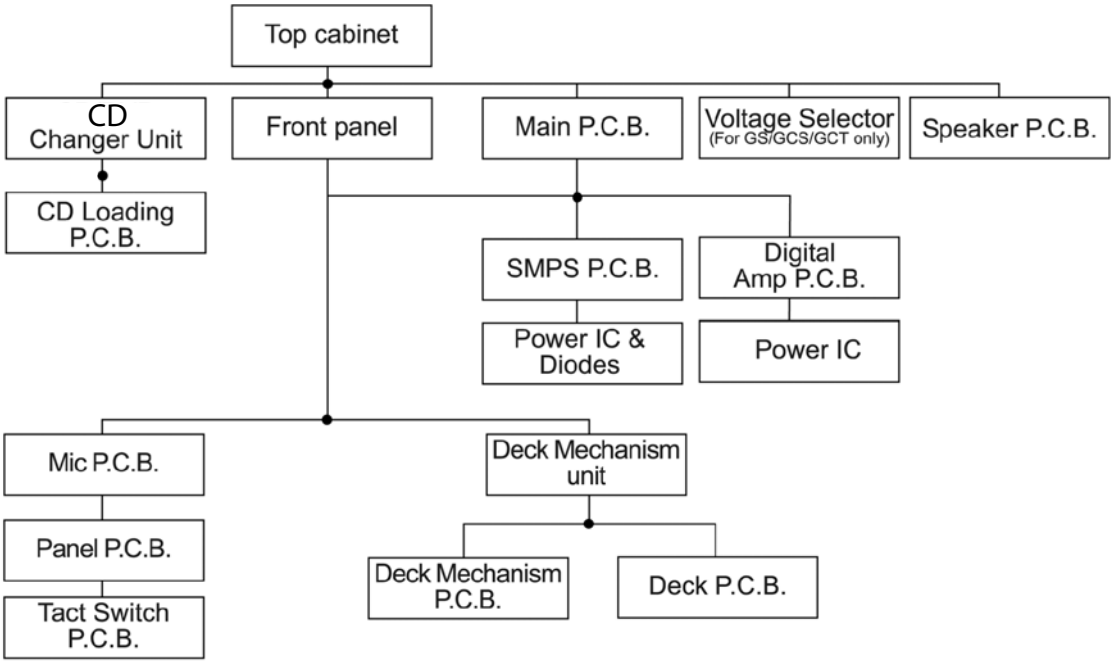

11.3. Main Parts Location

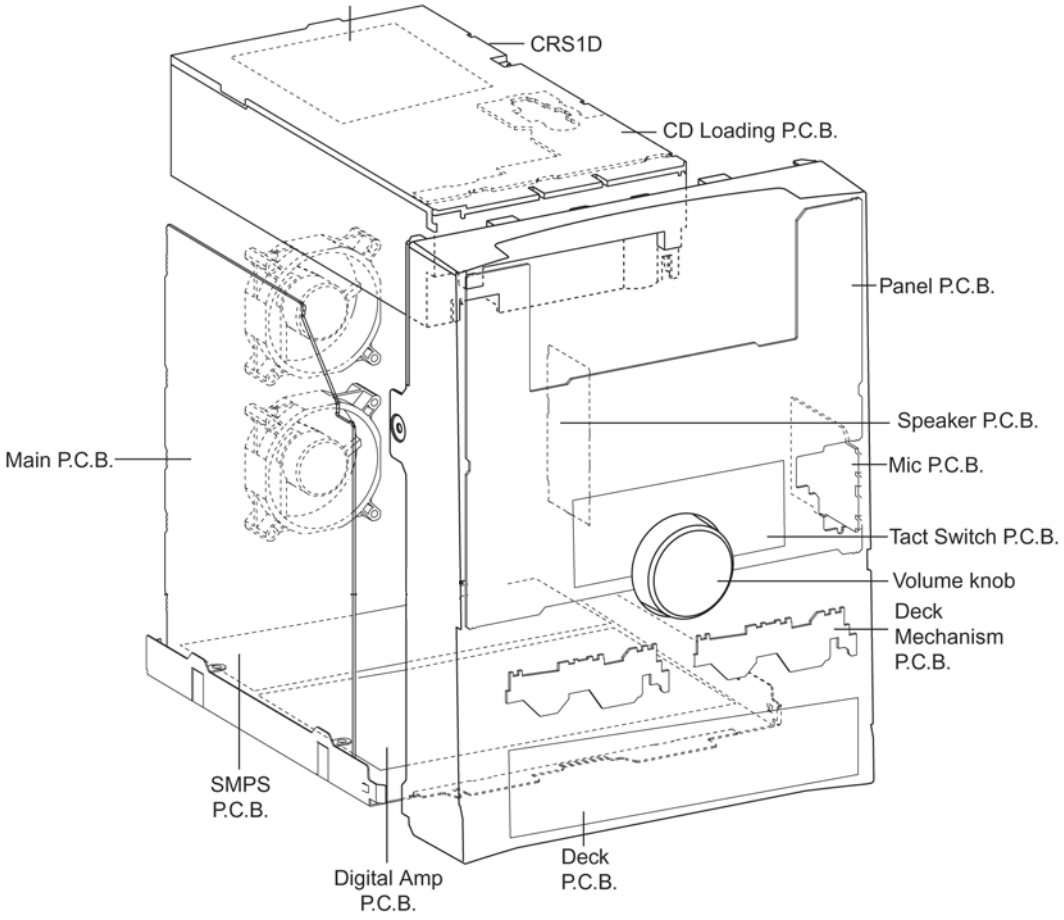

11.4. Disassembly of Top Cabinet

Step 1 Remove 3 screws at each side and 5 screws at rear panel.

Step 2 Lift up both sides of the top cabinet, push the top cabinet towards the rear to remove the top cabinet.

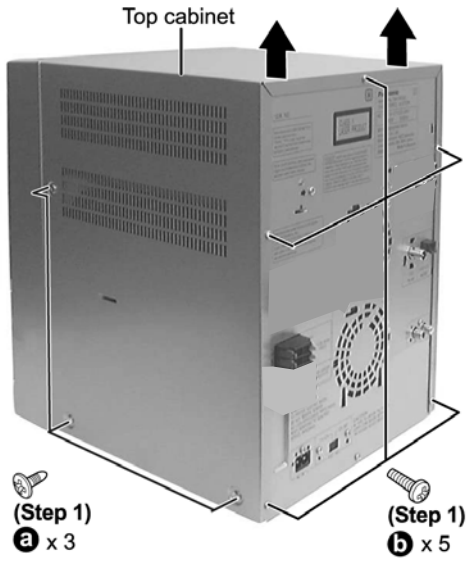

11.5. Disassembly of CD Changer Unit (CRS1D)

- Follow the (Step 1) - (Step 2) of Item 11.4 - Disassembly of Top Cabinet

Step 1 Remove 2 screws at rear panel.

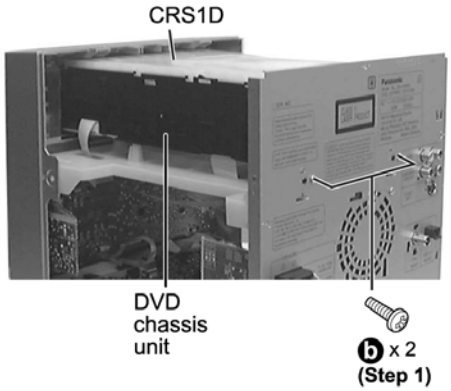

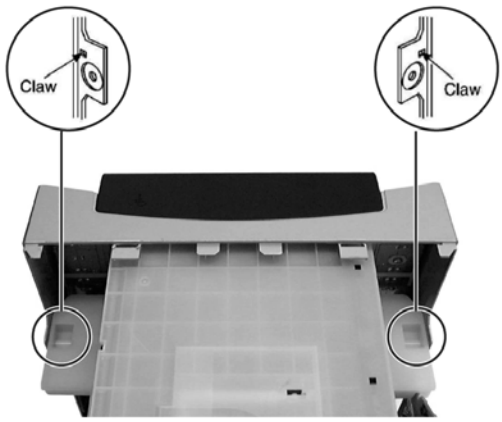

Step 2 Detach the FFC cables (CN2038 & CN2036).

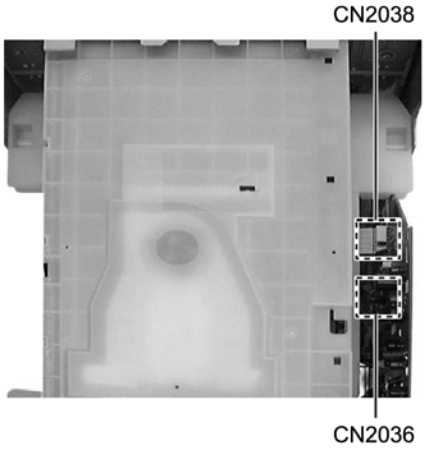

Step 3 Release the claws on both ends.

Step 4 Lift the CD changer unit upwards to remove it.

• **Disassembly of Mecha Chassis**

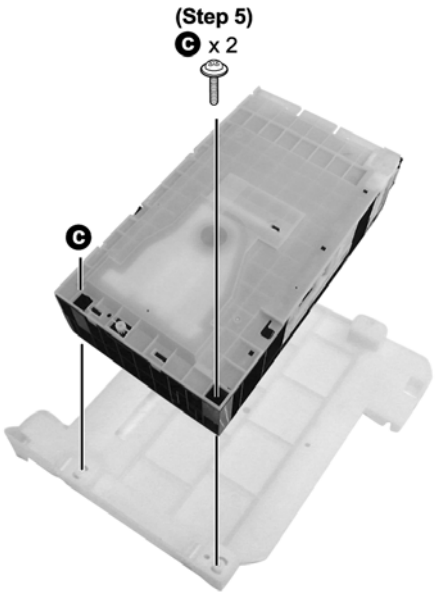

Step 5 Remove 2 screws.

Step 6 Remove the Mecha Chassis.

Note:

For disassembly & assembly of traverse unit, please refer to section 11.16 of this service manual. Please refer to original Service Manual for the Disassembly and Assembly of the CD Changer Unit (CRS1D), section 5.

11.6. Disassembly of Rear Panel

- Follow the (Step 1) - (Step 2) of Item 11.4 - Disassembly of Top Cabinet
- Follow the (Step 1) - (Step 4) of Item 11.5 - Disassembly of CD Changer Unit

Step 1 Remove 11 screws (For GS/GCS/GCT).

Remove 9 screws (For GC).

* The differentiate the screws for the GC with GS/GCS/GCT, just because of the Voltage Selector.

Step 2 Remove 2 screws at Speaker P.C.B..

Step 3 Detach the fan wires CNP2913 & CNP2914 from Main P.C.B..

Step 4 Remove rear panel.

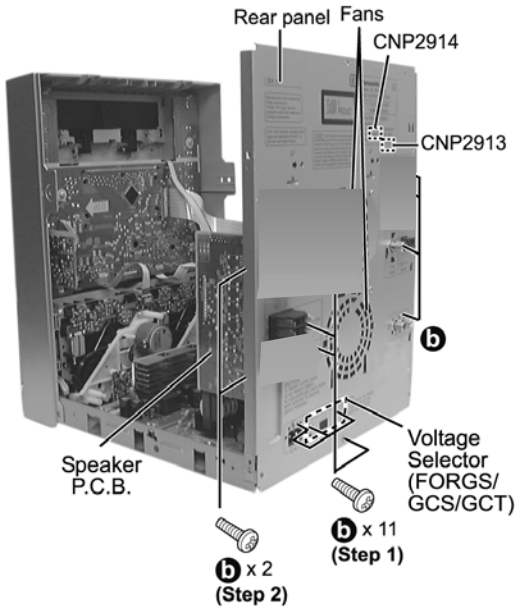

11.7. Disassembly of Main P.C.B.

- Follow the (Step 1) - (Step 2) of Item 11.4 - Disassembly of Top Cabinet
- Follow the (Step 1) - (Step 4) of Item 11.5 - Disassembly of CD/DVD Changer Unit
- Follow the (Step 1) - (Step 4) of Item 11.6 - Disassembly of Rear Panel

Step 1 Disconnect FFC cables (CN2803, CNP2601 and CNP2602).

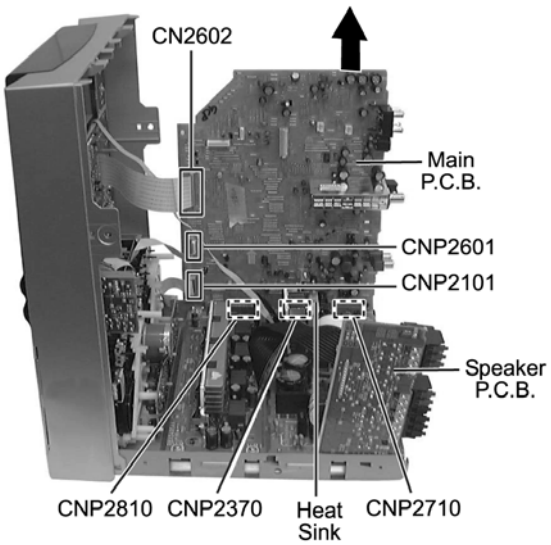

Step 2 Detach 3 connectors (CNP2810, CNP2370 & CNP2710).

Step 3 Remove Main P.C.B.

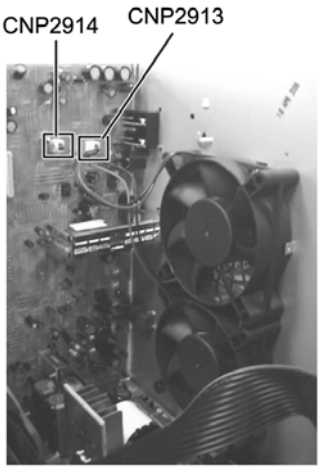

Caution:

1. Ensure the wires dressing must be at the top side to prevent for wire touch heat sink unit.
2. The wire at upper fan connect to CNP2913.
3. The wire at lower fan connect to CNP2914.

11.8. Disassembly of Front Panel Unit

- Follow the (Step 1) - (Step 2) of Item 11.4 - Disassembly of Top Cabinet
- Follow the (Step 1) - (Step 4) of Item 11.5 - Disassembly of CD/DVD Changer Unit

Step 1 Disconnect connectors (CN2602, CNP2601, CNP2101 and CN5904).

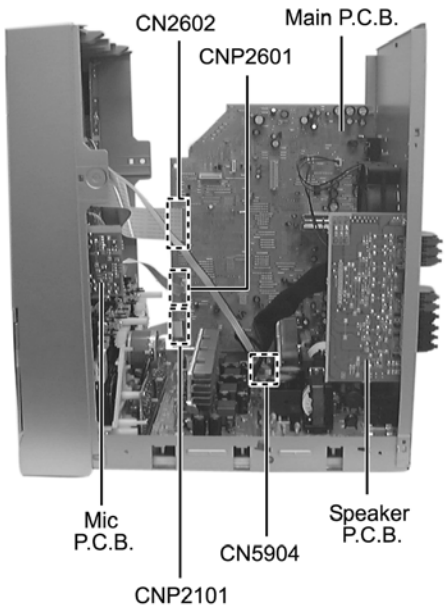

Step 2 Bent the front panel unit slightly forward as shown.

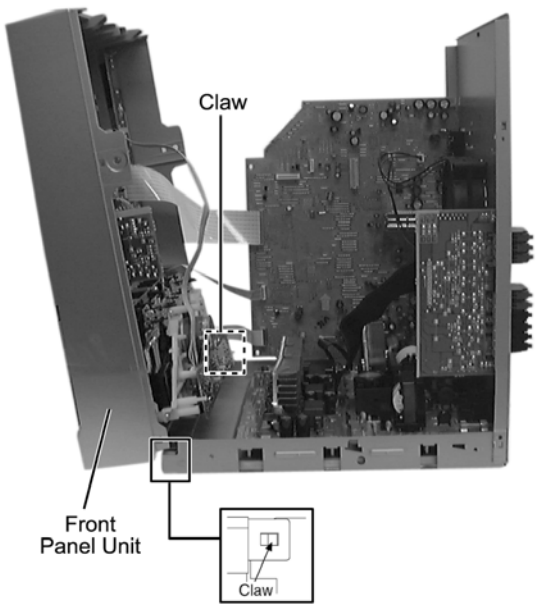

Step 3 Release 2 claws.

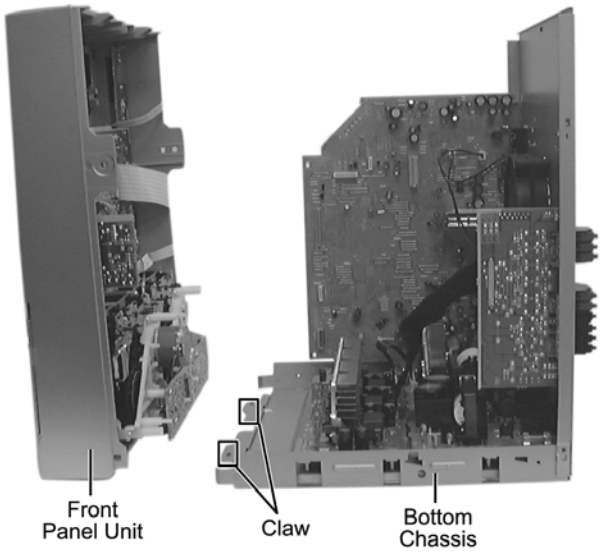

Step 4 Remove the front panel unit.

Note: Ensure 2 claws located at the bottom chassis is seated into the 2 slots at bottom of front panel at 2 catches (one on each side) of bottom chassis to be aligned to front panel's slot. Assembly is secured upon hearing clicking sound.

11.9. Disassembly of SMPS P.C.B.

- Follow the (Step 1) - (Step 2) of Item 11.4 - Disassembly of Top Cabinet
- Follow the (Step 1) - (Step 4) of Item 11.5 - Disassembly of CD/DVD Changer Unit
- Follow the (Step 1) - (Step 4) of Item 11.6 - Disassembly of Rear Panel
- Follow the (Step 1) - (Step 3) of Item 11.7 - Disassembly of Main P.C.B.
- Follow the (Step 1) - (Step 4) of Item 11.8 - Disassembly of Front Panel Unit

Step 1 Disconnect connector (CN5502 at Digital Amp P.C.B.).

Step 2 Remove 2 screws.

(The below illustration is for GS/ GCS & GCT only.)

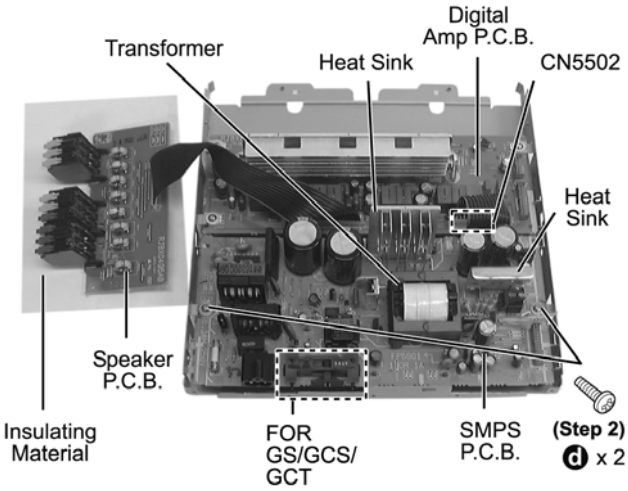

11.10. Replacement of Power Amp IC (SMPS P.C.B.)

- Follow the (Step 1) - (Step 2) of Item 11.4 - Disassembly of Top Cabinet
- Follow the (Step 1) - (Step 4) of Item 11.5 - Disassembly of CD/DVD Changer Unit
- Follow the (Step 1) - (Step 4) of Item 11.6 - Disassembly of Rear Panel
- Follow the (Step 1) - (Step 3) of Item 11.7 - Disassembly of Main P.C.B.
- Follow the (Step 1) - (Step 4) of Item 11.8 - Disassembly of Front Panel Unit

Step 1 Remove 1 screw.

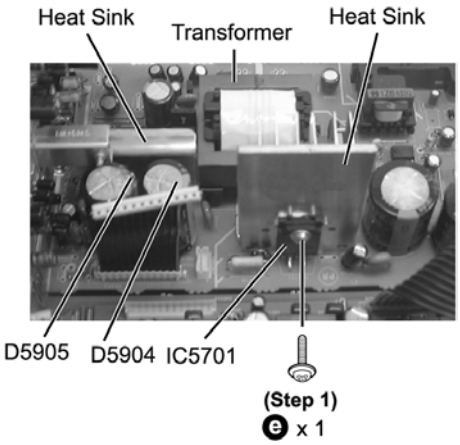

Step 2 Flip over the PCB.

Step 3 Desolder IC5701.

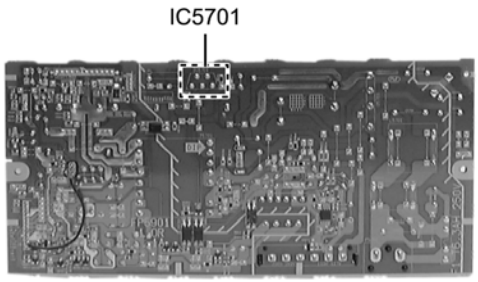

- **Relacement of Regulator Diodes**

Step 1 Desolder D5904 & D5905.

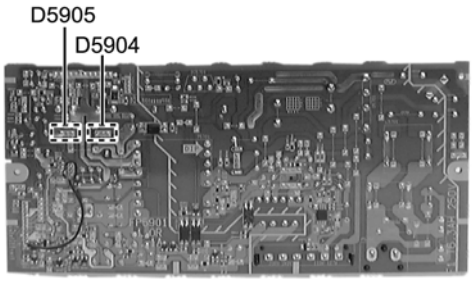

11.11. Disassembly of Digital Amp P.C.B.

- Follow the (Step 1) - (Step 2) of Item 11.4 - Disassembly of Top Cabinet
- Follow the (Step 1) - (Step 4) of Item 11.5 - Disassembly of CD/DVD Changer Unit
- Follow the (Step 1) - (Step 4) of Item 11.6 - Disassembly of Rear Panel
- Follow the (Step 1) - (Step 3) of Item 11.7 - Disassembly of Main P.C.B.
- Follow the (Step 1) - (Step 4) of Item 11.8 - Disassembly of Front Panel Unit

Step 1 Detach cable CN5604.

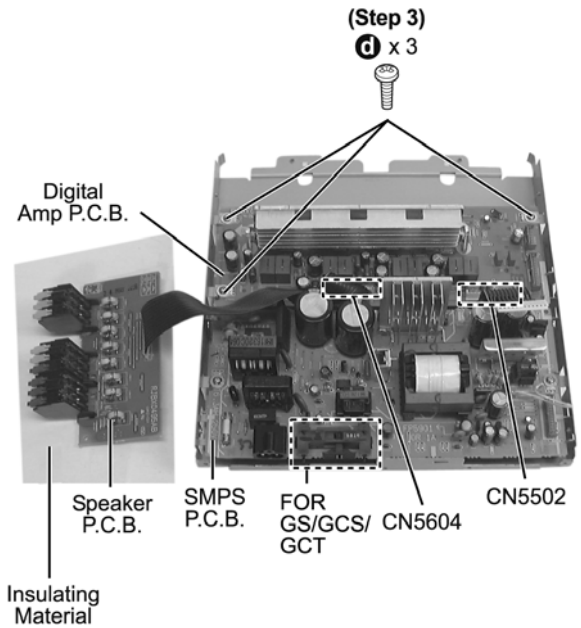

Step 2 Disconnect connector CN5502.

Step 3 Remove the 3 screws on Digital Amp P.C.B..

Step 4 Remove Digital Amp P.C.B..

Note:

Make sure P.C.B. slot insert to bottom chassis guide.

11.12. Replacement for Power Amp IC (Digital Amp P.C.B.)

- Follow the (Step 1) - (Step 3) of Item 11.11 - Disassembly of Digital Amp P.C.B.

Replament of Power Amp IC (IC5100)

Step 1 Remove IC clip.

- IC5100

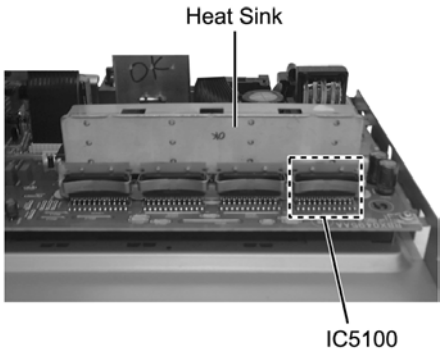

Step 2 Flip over the P.C.B..

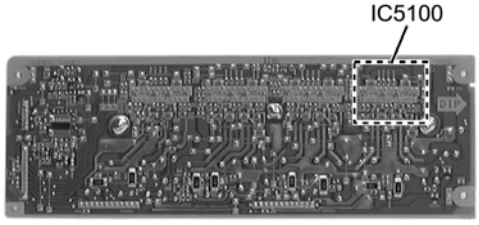

Step 3 Desolder IC5100.

Replament of Power Amp IC (IC5200/ IC5300/ IC5400)

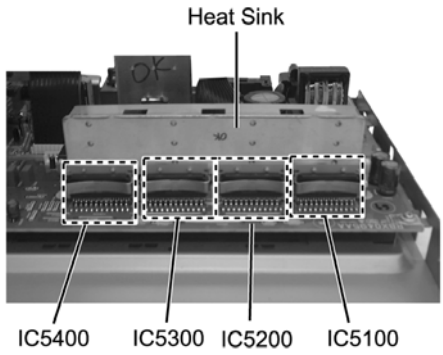

Repeat (Step 1) - (Step 3) of Item 11.11 for IC5200/ IC5300/IC5400.

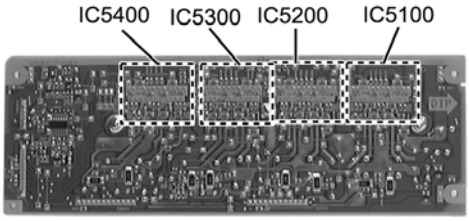

11.13. Disassembly of Panel P.C.B., Mic P.C.B. & Tact Switch P.C.B.

- Follow the (Step 1) - (Step 2) of Item 11.4 - Disassembly of Top Cabinet
- Follow the (Step 1) - (Step 4) of Item 11.5 - Disassembly of CD/DVD Changer Unit
- Follow the (Step 1) - (Step 4) of Item 11.8 - Disassembly of Front Panel Unit

Step 1 Remove 1 screw.

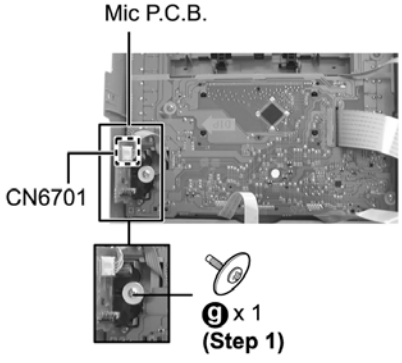

Step 2 Disconnect connector CN6701 at Mic P.C.B..

Step 3 Lift up the Mic P.C.B to remove it.

Step 4 Remove 6 screws.

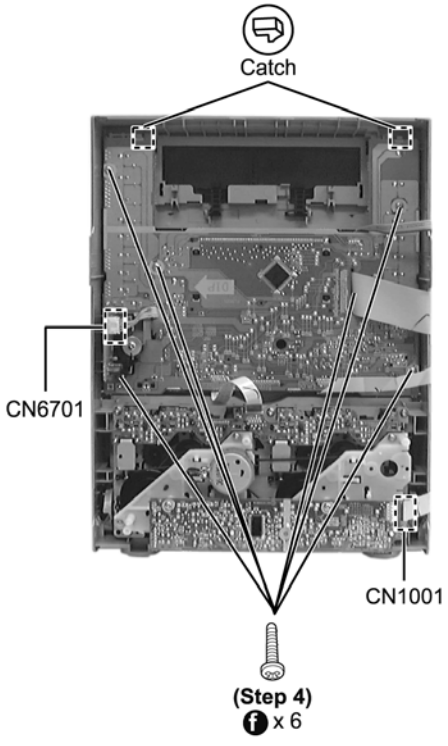

Step 5 Release 2 catches.

Step 6 Remove Panel P.C.B..

11.13.1. Disassembly of Tact Switch P.C.B.

Step 7 Remove the Volume knob & Mic Volume Knob.

Step 8 Remove 6 screws..

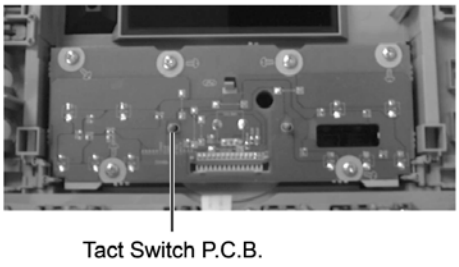

11.13.2. Disassembly of Lid

Step 1 Lift the spring sideward.

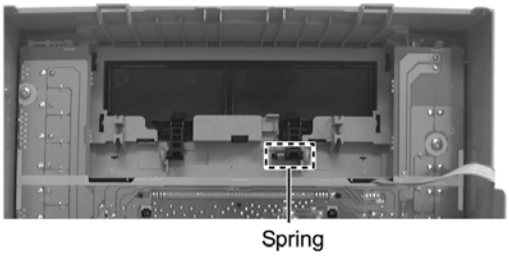

Step 2 Remove Lid.

Note: Do not misplace the spring.

11.14. Disassembly of Deck mechanism unit

- Follow the (Step 1) - (Step 2) of Item 11.4 - Disassembly of Top Cabinet
- Follow the (Step 1) - (Step 4) of Item 11.5 - Disassembly of CD/DVD Changer Unit
- Follow the (Step 1) - (Step 4) of Item 11.8 - Disassembly of Front Panel Unit

Step 1 Detach FFC cable (CN971).

Step 2 Disconnect FFC cable (CN1001).

Step 3 Remove the 5 screws.

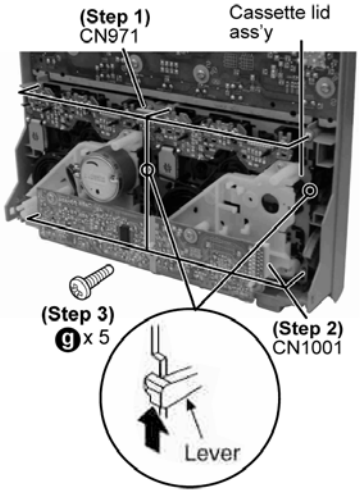

Step 4 Push the lever upward, and then open the cassette lid ass'y (For DECK1 and DECK2).

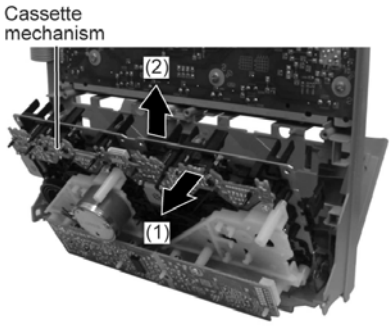

Step 5 Tilt the cassette mechanism unit in the direction of arrow (1), and then remove it in the direction of arrow (2).

Note: For disassembly of parts for deck mechanism unit, refer to Section 11.18.

11.15. Disassembly of Deck P.C.B.

- Follow the (Step 1) - (Step 2) of Item 11.4 - Disassembly of Top Cabinet
- Follow the (Step 1) - (Step 4) of Item 11.5 - Disassembly of CD/DVD Changer Unit
- Follow the (Step 1) - (Step 4) of Item 11.8 - Disassembly of Front Panel Unit

Step 1 Remove 2 screws.

Caution:
Do not damage the Play Gear 2 when pushing the Traverse Slide Plate.

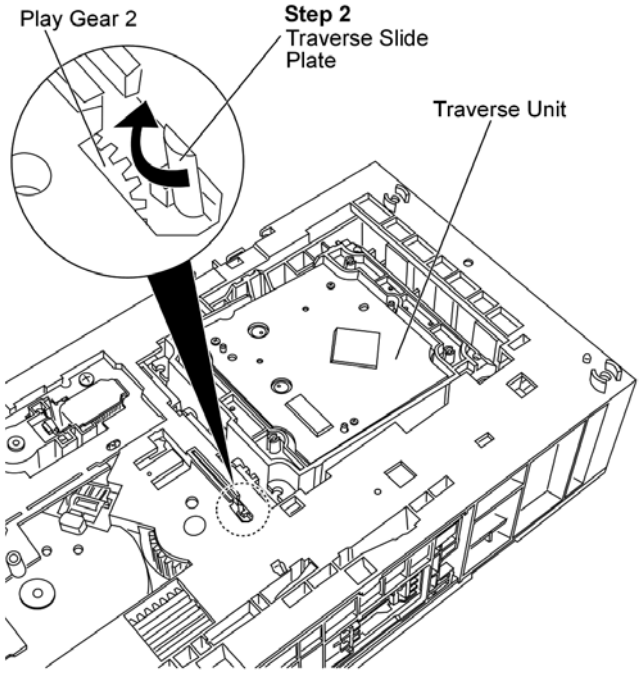

Step 2: Push the traverse slide plate as arrow shown to lock the traverse unit.

Disassembly of optical pickup unit (CD mechanism)

- Follow the (Step 1) - (Step 2) of Item 10.4 - Disassembly of Top Cabinet
- Follow the (Step 1) - (Step 4) of Item 10.6 - Disassembly of CD Changer Unit
- Follow the (Step 1) - (Step 2) of Item 10.14 - Disassembly of Traverse Unit

Step 1 Pull out FFC.

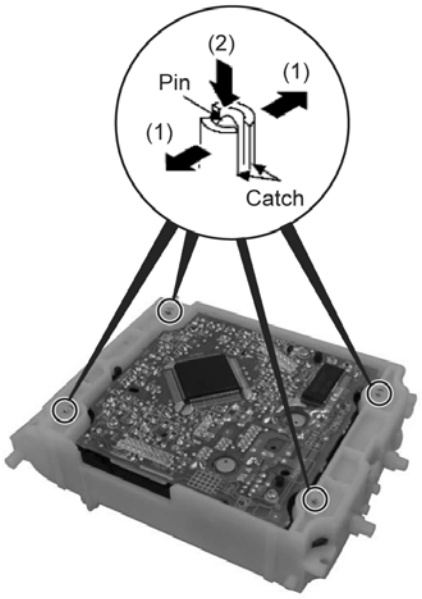

Step 2 Widening the catch, push the pin in.

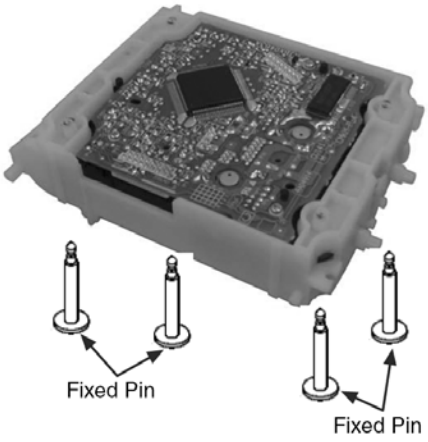

Step 3 Remove 4 pins.

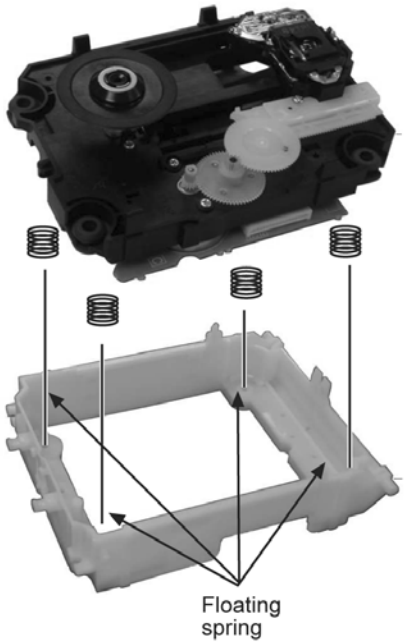

Step 4 Remove the traverse deck.

Note: As floating springs (4 pieces) come off at the same time, be careful not to lose them.

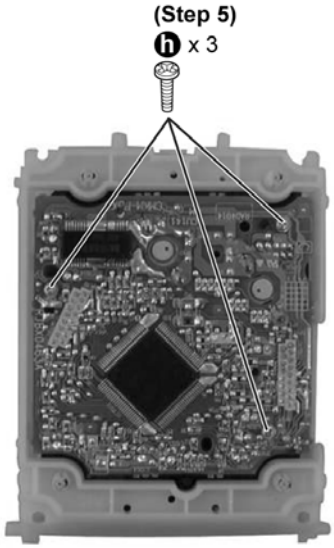

Step 5 Remove 3 screws.

Step 6 Remove the CD Servo P.C.B. and turn it over.

Note: Insert a short pin into FFC of the optical pickup.

Step 7 Rotate the traverse deck (B) to the arrow direction and shift the optical pickup to the furthest backward.

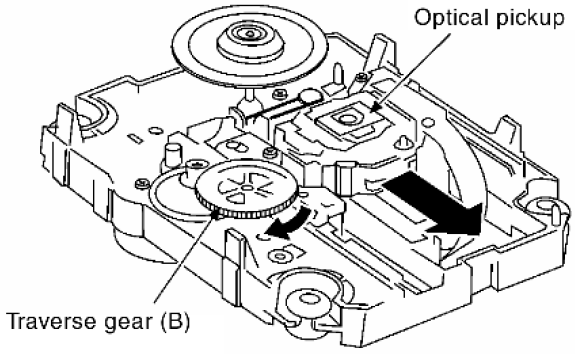

Step 8 Remove the catch of the drive rack, and take out the drive rack.

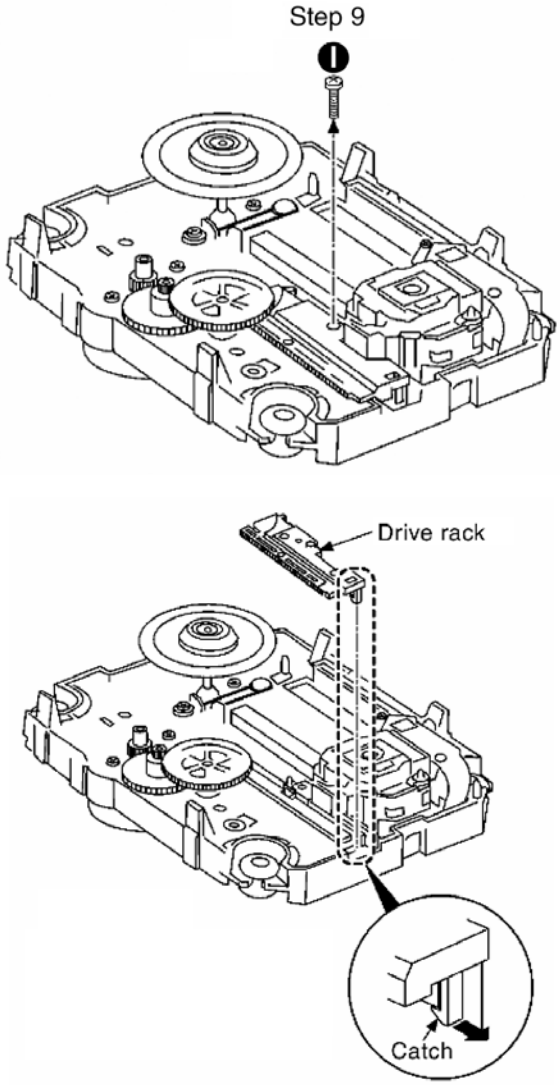

Step 9 Place the convex part of an optical pickup to the concave part of a traverse base, then take out the optical pickup.

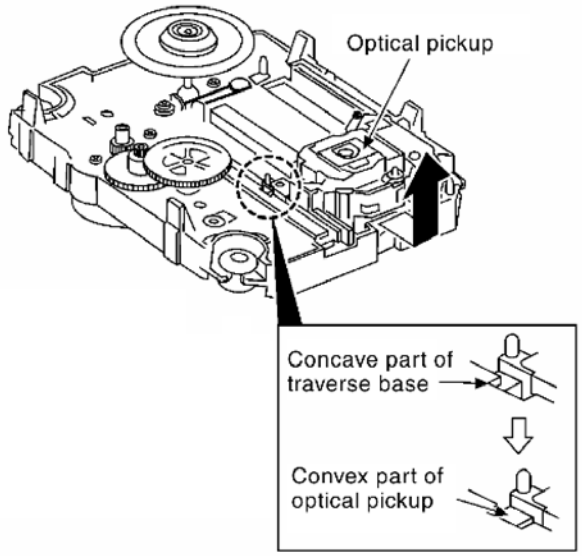

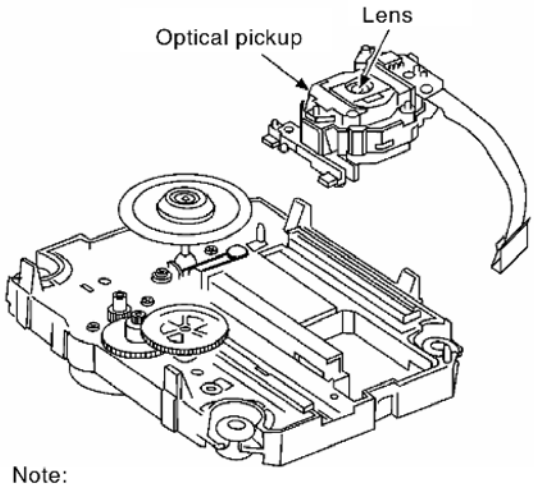

Note:
Do not touch the lens of the optical pickup

11.18. Disassembly of Deck Mechanism

· Follow the (Step 1) - (Step 2) of Item 10.4 - Disassembly of Top Cabinet
· Follow the (Step 1) - (Step 4) of Item 10.6 - Disassembly of CD Changer Unit
· Follow the (Step 1) - (Step 4) of Item 10.10 - Disassembly of Front Panel Unit
· Follow the (Step 1) - (Step 5) of Item 10.12 - Disassembly of Deck Mechanism Unit

11.18.1. Disassembly of the pinch roller ass'y and head block

* The mechanism as shown below is for DECK1. For DECK 2, perform the same procedures.

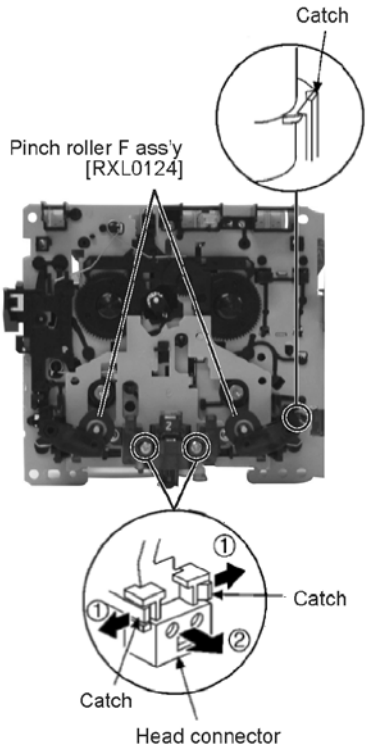

Step 1 Release the catch, and then remove the pinch roller (F).

Step 2 Release 2 claws and detach the head block connector.

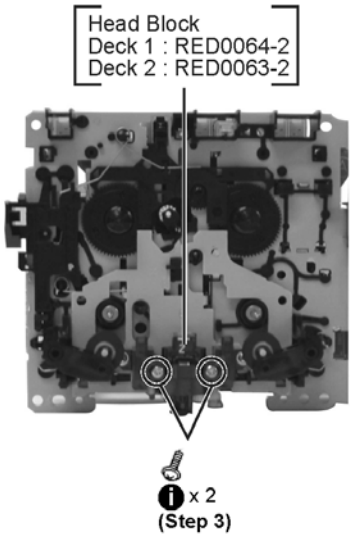

Step 3 Remove 2 screws.

Step 4 Remove head block.

11.18.2. Disassembly of capstan motor ass'y, capstan belt A, capstan belt B and winding belt

Step 1 Detach the head block connector (Deck P.C.B.).

Step 2 Desolder wire(W1002) at motor assembly.

Step 3 Remove Deck P.C.B.

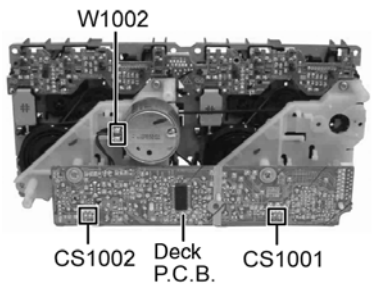

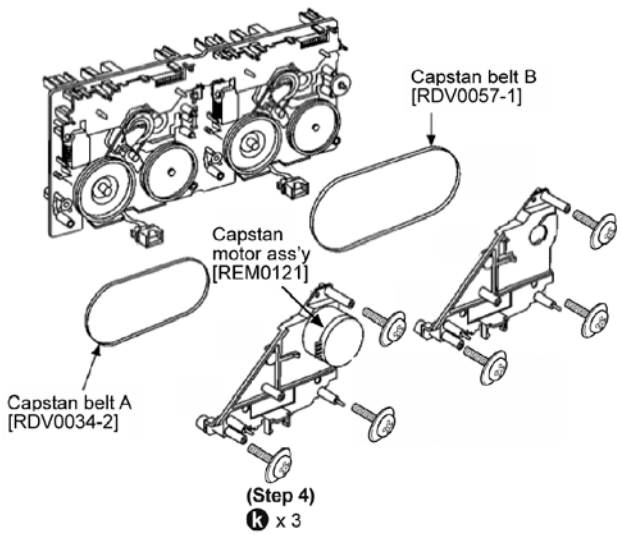

Step 4 Remove 3 screws (for deck 1 & 2).

Step 5 Remove capstan belt A/B.

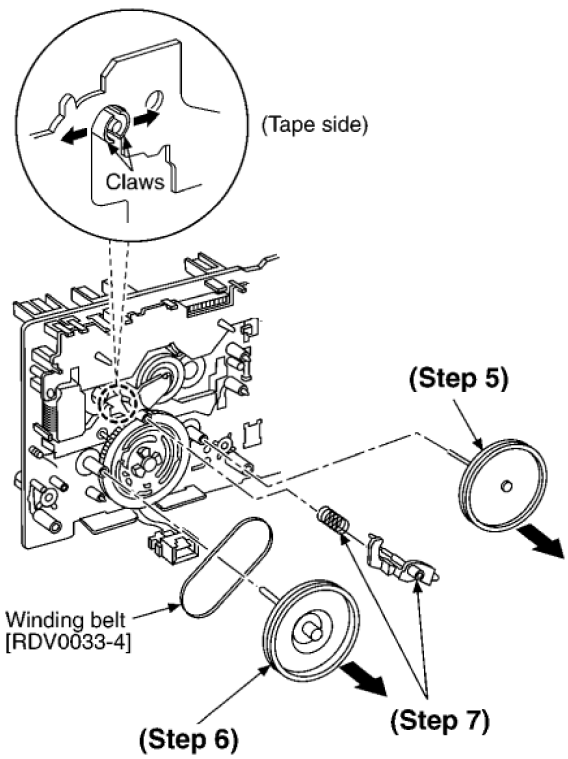

Step 6 Remove the flywheel R.

Step 7 Release the claw and remove the winding lever and spring.

[Installation of the belt]

Step 1 The boss and marking should be positioned horizontally.

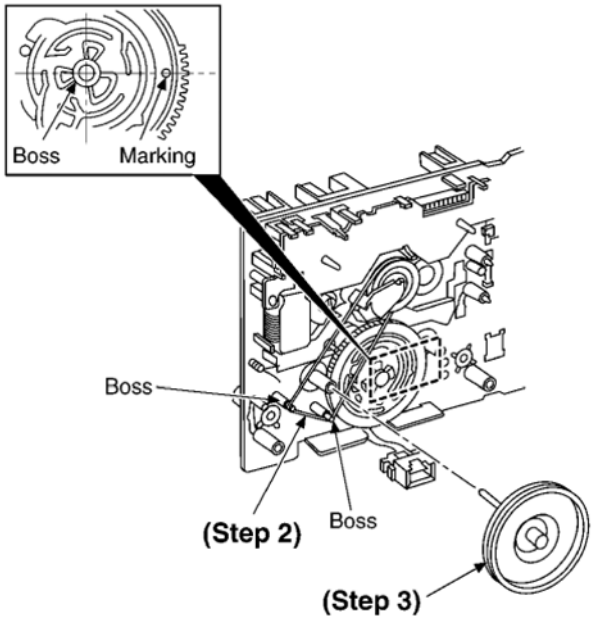

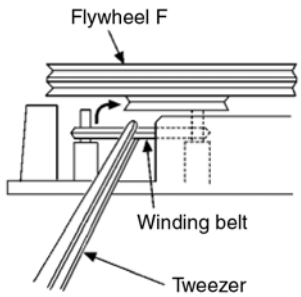

Step 2 Put the winding belt on the pulley temporarily.

Step 3 Install the flywheel F.

Step 4 Put the winding belt on the flywheel F.

Step 5 Install the winding lever and spring while pressing the winding arm in the direction of arrow.

Step 6 Install the flywheel R.

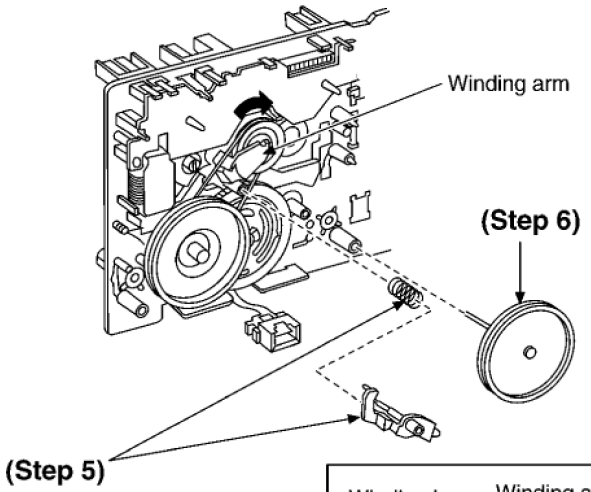

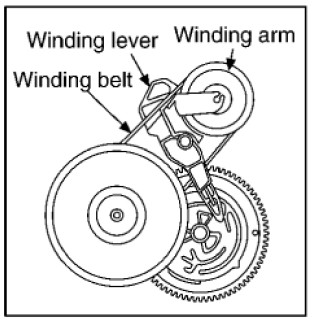

NOTE:
The winding lever should be positioned as shown below.

Step 7 Put the capstan belt A temporarily as shown below.

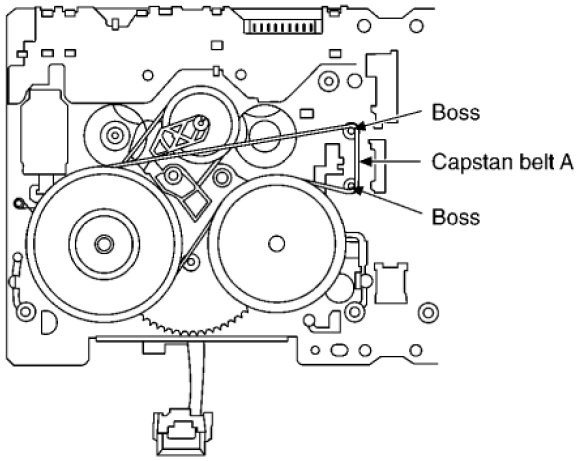

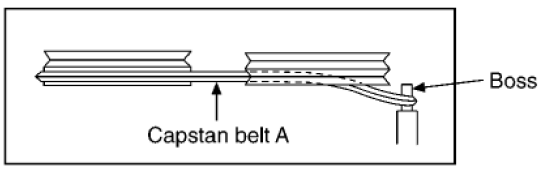

(Side view)

Step 8 Put the capstan belt B on the motor ass'y pulley.

Step 9 Install the sub chassis to the mechanism, and then tighten screws.

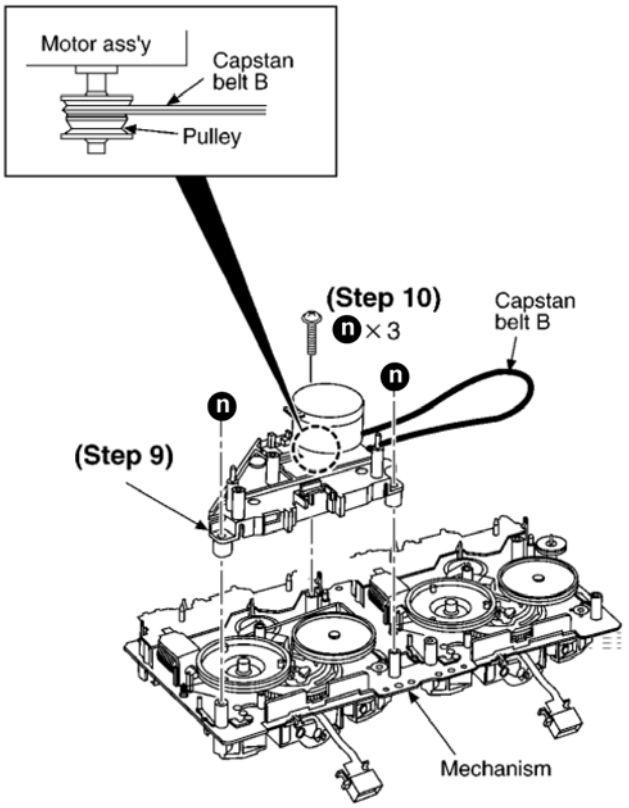

Step 10 Install 3 screws.

Step 11 Put the capstan belt B as shown below.

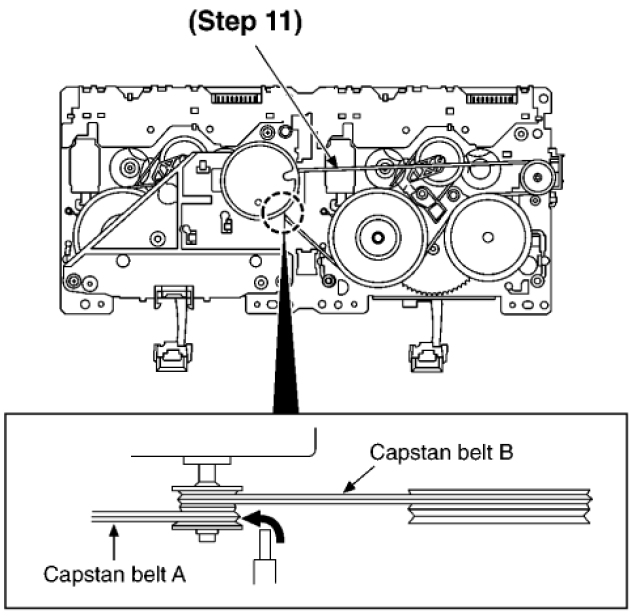

Step 12 Put the capstan belt A on the motor ass'y pulley.

11.19. Replacement for cassette lid

- Follow the (Step 1) - (Step 2) of Item 11.4 - Disassembly of Top Cabinet

Step 1 Lift up the lever upward, open the cassette deck. (For DECK1 and DECK2)

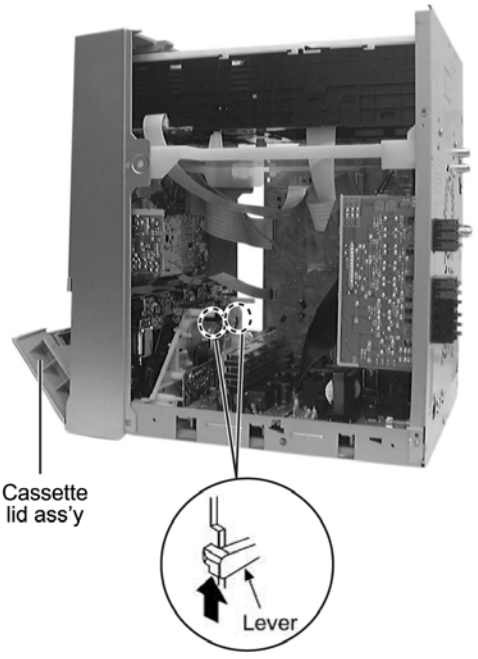

Step 2 Push up the cassette lid (L/R) in the direction of arrow. (For DECK1 and DECK2).

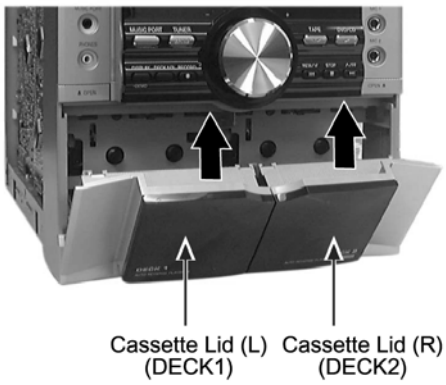

11.20. Rectification for tape jam problem

- Follow the (Step 1) - (Step 2) of Item 11.4 - Disassembly of Top Cabinet

Step 1 If a cassette tape cannot be removed from the deck (the tape is caught by the capstan or pinch roller during playback or recording), rotate the flywheel F in the direction of the arrow to remove it.

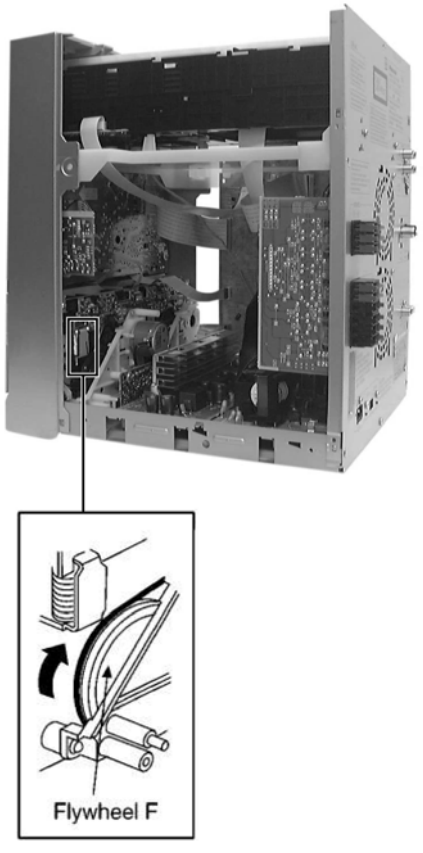

Step 2 Push the lever upward and open the cassette lid. Remove the cassette tape.

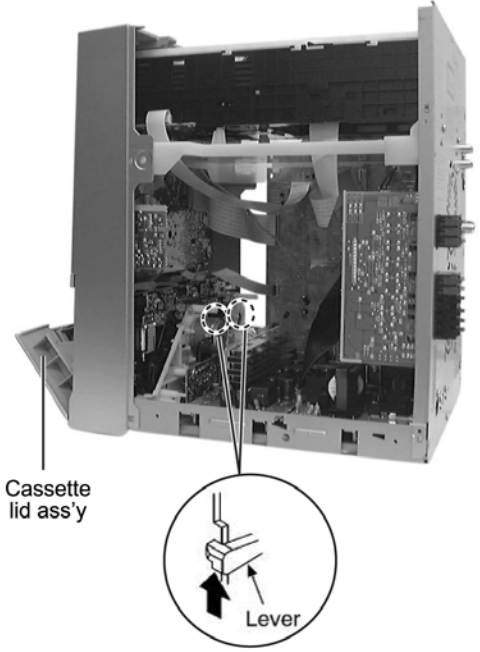
Cassette
lid ass'y
Lever

12 Service Fixture and Tools

Service Tools	
Extension FFC	
(A) Deck P.C.B. - Main P.C.B.	REEX0485 (14 Pins)
(B) Panel P.C.B. - Deck Mechanism P.C.B.	REEX0484 (10 Pins)

13 Service Positions

Note: For description of the disassembly procedures, see the Section 11.

13.1. Checking and Repairing of Main P.C.B.

1. Remove Top cabinet

- Remove 3 screws on L/R side.
- Remove 5 screws on rear panel.
- Remove top cabinet.

Main P.C.B.

13.2. Checking and Repairing of SMPS P.C.B. & Digital Amp P.C.B.

1. Remove Top cabinet

- Remove 3 screws on L/R side.
- Remove 5 screws on rear panel.
- Remove top cabinet.

2. Remove CD Changer Unit (CRS1D)

- Remove 2 screws.
- Remove CD Changer Unit (CRS1D).

3. Remove Rear Panel

- Remove 11 screws (For GS/GCS/GCT).
- Remove 9 screws (For GC).
- Remove 2 screws at Speaker P.C.B..
- Remove rear panel.

4. Disassemble Front Panel unit

- Disconnect 4 connectors (CN2602, CNP2601, CNP2101 & CN5904).
- Remove Front Panel Unit.

5. Disassemble Main P.C.B.

- Detach 3 connectors (CNP2810, CNP2370 & CNP2710).
- Remove Main P.C.B..

6. Remove Bottom Chassis

- Remove 2 screws at SMPS P.C.B..
- Remove 3 screws at Digital Amp P.C.B..
- Remove bottom Chassis.

7. Connect Main P.C.B., Fans & Front Panel Unit

Connect 3 connectors CNP2810, CNP2370 & CNP2710 at SMPS P.C.B. & Digital Amp P.C.B..
Connect 3 connectors to CN2602, CNP2601 and CNP2101 at Main P.C.B..
Connect wire to CN5904 at SMPS P.C.B..
Rotate the unit to horizontal.
Connect 2 fans (upper fan connect to CNP2913 & lower fan connect to CNP2914).

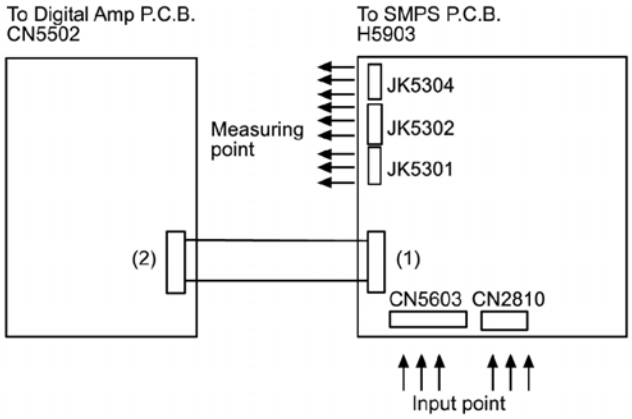

(1) Connect H5903 (SMPS P.C.B.) to connector CN5502 (Digital Amp P.C.B.)

(2) Connect CN5502 (Digital Amp P.C.B.) to H5903 (SMPS P.C.B.)

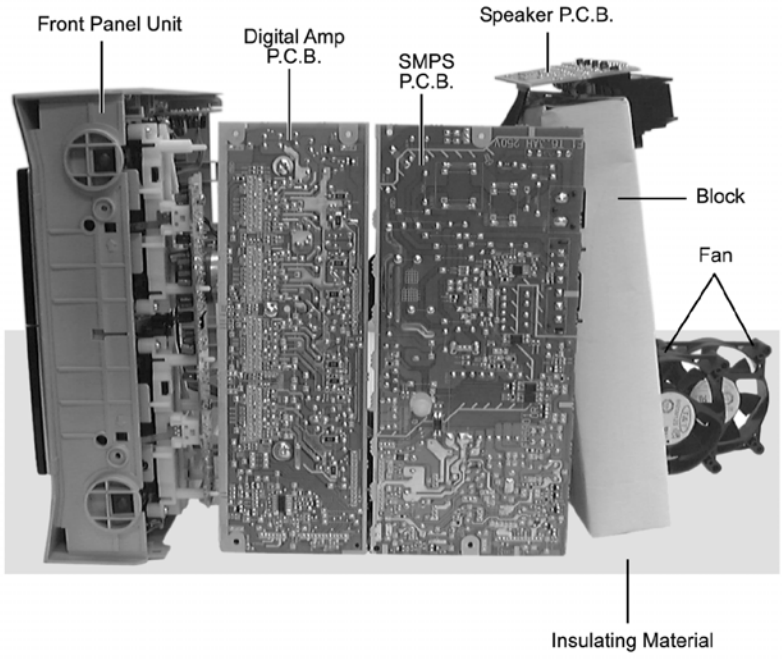

13.3. Checking and Repairing of Panel, Deck & Deck Mechanism P.C.B.

1. Remove Top cabinet

- Remove 3 screws on L/R side.
- Remove 5 screws on rear panel.
- Remove top cabinet.

2. Disassemble CD Changer Unit (CRS1D)

- Remove 2 screws.
- Remove CD Changer Unit (CRS1D).

3. Disassemble Front Panel unit

- Disconnect 4 connectors (CN2602, CNP2601, CNP2101 & CN5904).
- Remove Front Panel Unit.

4. Disassemble Panel P.C.B.

- Remove 1 screw at Mic P.C.B..
- Lift up the Mic P.C.B.
- Remove 6 screws at Panel P.C.B..

5. Connect Panel P.C.B., CRS1D & Deck Mechanism

Connect 10P FFC cable (REEX0484) between CN971 to CN6601.
Connect 11P FFC cable beween CN2101 to CN1001.
Connect 14P FFC cable between H6702 to CNP2601.
Connect 30P FFC cable between CN6703 to CN2602.
Connect 3P wires to CN5904.
Connect FFC cable between CN1 to CN2038.
Connect FFC cable between FP8101 to CN2036.

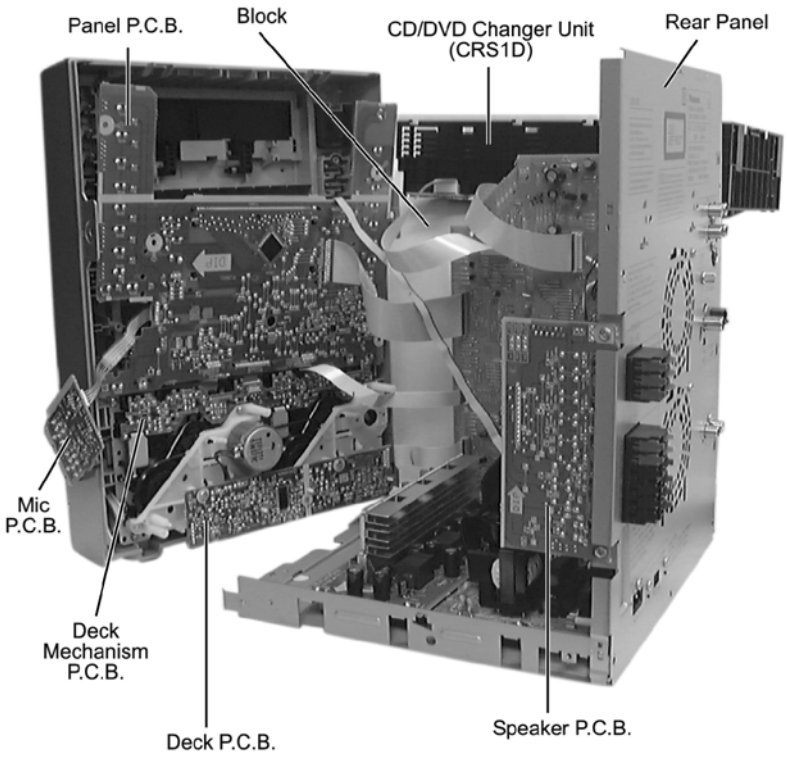

14 Adjustment Procedures

14.1. Cassette Deck Section

- Measurement Condition
  - Reverse-mode selector switch:
  - Tape edit: NORMAL
  - Make sure head, capstan and press roller are clean.
  - Judgeable room temperature 20 ± 5 °C (68 ± 9°F)
- Measuring instrument
  - EVM (DC Electronic volmeter)
  - Digital frequency counter
- Test Tape
  - Tape speed gain adjustment (3 kHz, -10 dB); QZZCWAT

14.1.1. Head Azimuth Adjustment (Deck 1/2)

Caution:

- Please replace both azimuth adjustment screw and springs simultaneously when readjusting the head azimuth. (shown in Fig. 2) Even if you wish to readjust the head azimuth without replacing the screws and springs, a fine adjustment to the azimuth screw and spring.
- Please remove the screw-locking bond left on the head base when replacing the azimuth screw.
- If you wish to readjust the head azimuth, be sure to adjust with adhering the cassette tape closely to the mechanism by pushing the center of cassette tape with your finger. (shown in Fig. 3)

1. Playback the azimuth adjustment portion (8 kHz, -20dB) of the test tape (QZZCFM) in the forward play mode. Vary the azimuth adjustment screw until the output of the R-CH (PB OUT-R) are maximized.
2. Perform the same adjustment in the reverse play mode.
3. After the adjustment, apply screwlock (NEJI-LOCK) to the azimuth adjusting screw. Screw-Lock applied on the screw must be more than 180° around screw.

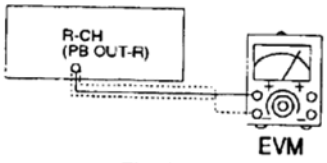

Fig. 1

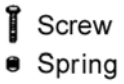

Fig. 2

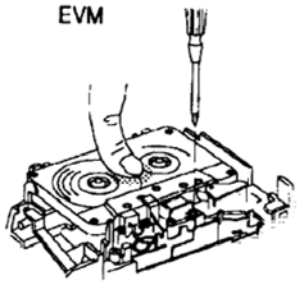
Fig. 3

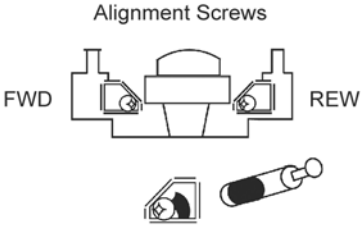

Fig. 4

14.1.2. Tape Speed Adjustment (Deck 1/2)

1. Set the tape edit button to “NORMAL” position.
2. Insert the test tape (QZZCWAT) to DECK 2 and playback (FWD side) the middle portion of it.
3. Adjust Motor VR (DECK 2) for the output value shown below.

   Adjustment target: 2910 ~ 3090 Hz (NORMAL speed)

4. After alignment, assure that the output frequency of the DECK 1 FWD are within ±90 Hz of the value of the output frequency of DECK 2 FWD.

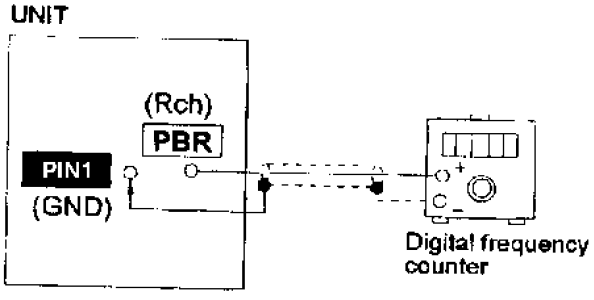

Fig. 1

14.1.3. Bias Voltage Check

1. Set the unit “AUX” position.
2. Insert the Normal blank tape (QZZCRA) into DECK 2 and the unit to “REC” mode (use ●, REC key).
3. Measure and make sure that the output is within the standard value.

Bias voltage for Deck 2	14±4mV (Normal)

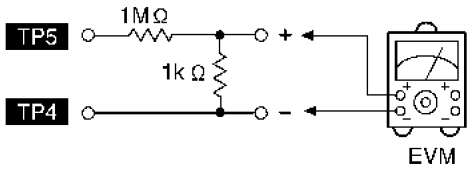

Fig. 2

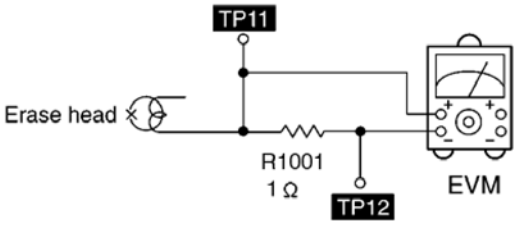

Fig. 3

14.1.4. Bias Frequency Adjustment (Deck 1/2)

1. Set the unit to “AUX” position.
2. Insert the Normal blank tape (QZZCRA) into DECK 2 and set the unit to “REC” mode (use ●, REC key).
3. Adjust L1002 so that the output frequency is within the standard value.

Standard Value: 89 ~ 110 kHz

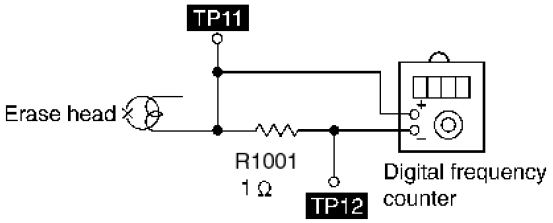

Fig. 4

14.2. Tuner Section

14.2.1. AM-IF Alignment

1. Connect the instrument as shown in Fig. 5.
2. Set the unit to AM mode.
3. Apply signal as shown in Fig. 5 from AM-SG.
4. Adjust Z2602 so that the output frequency is maximized in Fig. 6.

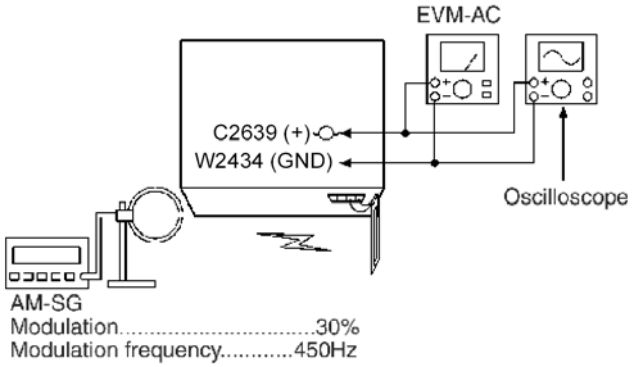

Fig. 5

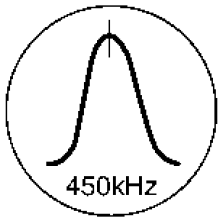

Fig. 6

7. Receive 600Hz in the unit.
8. Adjust L2601 (ANT) so that the EVM-SG is maximized.
9. Set AM-SG to 520kHz.
10. Receive 520kHz in the unit.
11. Adjust L2602 (OSC) so that the EVM-DC value is with 1.1±0.5V.

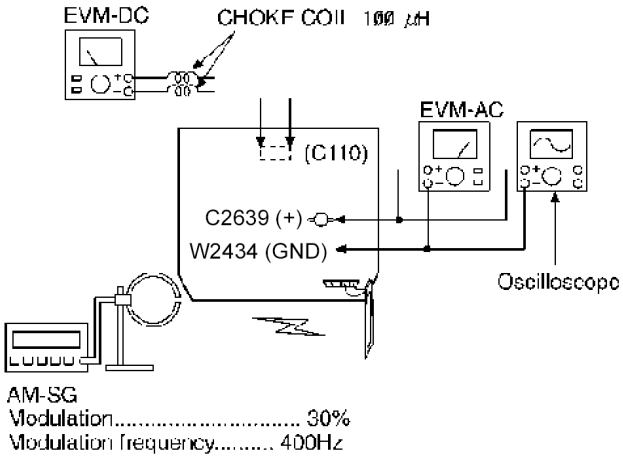

Fig. 7

14.2.2. AM RF Adjustment

1. Connect the instrument as shown in Fig. 7.
2. Set the unit to AM mode.
3. Set AM-SG to 520kHz.
4. Receive 520kHz in the unit.
5. Adjust L2601 (OSC) so that the EVM-AC is maximized.
6. Set AM-SG to 600Hz.

14.3. Alignment Points

14.3.1. Cassette Deck Section

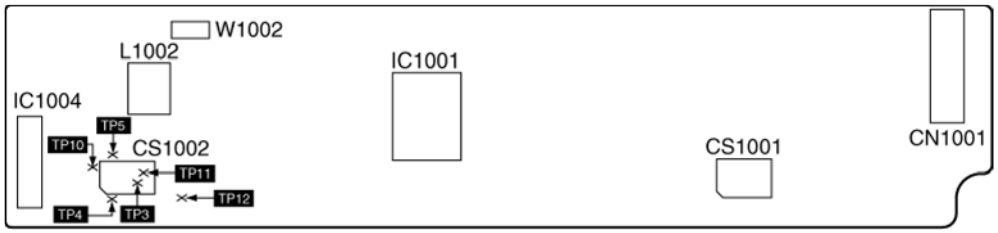

15 Voltage and Waveform Chart

Note:

Circuit voltage and waveform described herein shall be regarded as reference information when probing defect point, because it may differ from an actual measuring value due to difference of Measuring instrument and its measuring condition and product itself.

15.2. Main P.C.B.

MAIN P.C.B																				
Ref No.	IC2101																			
MODE	1	2	3	4	5	6	7	8	9	10	11	12	13	14	15	16	17	18	19	20
CD PLAY	4.5	4.6	4.5	4.6	4.5	4.5	4.5	4.5	4.5	4.5	4.5	4.5	4.5	4.5	4.5	0	5.4	0	9	0.7
STANDBY	0.1	0.1	0.1	0.1	0.1	0.1	0.1	0.1	0.1	0.1	0.1	0.1	0.1	0.1	0.2	0	0	0	0.4	0.1
Ref No.	IC2101																			
MODE	21	22	23	24	25	26	27	28	29	30	31	32								
CD PLAY	4.5	4.5	4.5	4.5	4.5	4.5	4.5	4.5	4.5	4.5	4.5	4.5								
STANDBY	0.2	0.2	0.1	0	0.1	0	0.1	0	0.1	0	0.1	0.1								
Ref No.	IC2103																			
MODE	1	2	3	4	5	6	7	8												
CD PLAY	0	0	0	-3.8	0	0	0	3.8												
STANDBY	0	0	0	0.4	0	0	0	0.3												
Ref No.	IC2561																			
MODE	1	2	3	4	5															
CD PLAY	16.1	5.2	0	1	4.3															
STANDBY	17.8	0	0	0	0															
Ref No.	IC2601																			
MODE	1	2	3	4	5	6	7	8	9	10	11	12	13	14	15	16	17	18	19	20
CD PLAY	2	5.9	2	2	0	5	5.2	3.8	0	4.8	3.5	3.5	1.6	1.5	1.9	2	2	2.2	0	0.1
STANDBY	0	0.4	0	0	0	0.3	0.4	0	0.4	0.3	0.3	0.4	0	0	0	0	0	0.1	0	0
Ref No.	IC2601																			
MODE	21	22	23	24																
CD PLAY	2.4	2.4	5.9	4.5																
STANDBY	0	0	0.4	0.4																
Ref No.	IC2602																			
MODE	1	2	3	4	5	6	7	8	9	10	11	12	13	14	15	16	17	18	19	20
CD PLAY	2.6	0	0	0	5.2	4.8	1.1	4.5	0	15.4	0	0	2.6	0	5.2	0	0	15.4	0	2.6
STANDBY	0	0	0	0	0.3	0.4	0	0.4	0.3	0	0	0.4	0	0	0.4	-0.2	-0.2	0	0	0
Ref No.	IC2701																			
MODE	1	2	3	4	5	6	7	8	9	10	11	12	13	14	15	16				
CD PLAY	5.2	2.5	2.6	1.8	5.2	1.8	0	2.4	0	0	2.4	2.4	1.7	1.7	1.6	2.4				
STANDBY	0	0	0	-0.1	0	0	0	0	0	0	0.2	0.2	0	0	0.2	0				
Ref No.	IC2801																			
MODE	1	2	3	4	5	6	7	8	9	10	11	12	13	14	15	16	17	18	19	20
CD PLAY	1.3	0	0	5.4	5.4	0	0	0	0	0.6	0.7	5.4	2.7	0	2.6	5.5	5.4	5.4	0	3.7
STANDBY	0	0	0	0	0	0	0	0	0	0.7	0.7	5.4	2.7	0	2.6	5.4	5.4	5.4	0	3.6
Ref No.	IC2801																			
MODE	21	22	23	24	25	26	27	28	29	30	31	32	33	34	35	36	37	38	39	40
CD PLAY	5.1	5	0	0	0.2	0	5.4	0	0	0	0	0	0	1.3	2.7	4.2	4.5	0	5.4	0
STANDBY	0.3	0.3	0	0	0	0	0	0	0	0	0	0	0	0	0	0	0	0	0	5
Ref No.	IC2801																			
MODE	41	42	43	44	45	46	47	48	49	50	51	52	53	54	55	56	57	58	59	60
CD PLAY	0	0	0	0	0	5.3	5.4	5.4	0	0	5.3	5.3	0	0	0	0	0	5.4	5.4	5.4
STANDBY	0	0	0	0	0	0	0.7	0	0	0	0	0	0	0	0	0	0	0.3	0.3	0
Ref No.	IC2801																			
MODE	61	62	63	64	65	66	67	68	69	70	71	72	73	74	75	76	77	78	79	80
CD PLAY	0	5.4	0	0	0	0	5.4	5.4	0	0	0	4	4.1	4.9	0	0	0	5.3	0	0
STANDBY	0	0	5.4	0	0	0	5.4	0	0	0	0	0	0	0	0	0	0	0	0	0
Ref No.	IC2801																			
MODE	81	82	83	84	85	86	87	88	89	90	91	92	93	94	95	96	97	98	99	100
CD PLAY	0	0.1	0	0	0	0.1	5.3	0	2.7	0	4.9	4.6	3.2	2.3	0.6	0	0.6	5.4	5.4	0
STANDBY	0	0	0	0	0	0	0	0	2.7	0	0	0	3.2	2.3	0	0	0	5.4	5.4	0
Ref No.	IC2804																			
MODE	1	2	3	4	5	6	7	8												
CD PLAY	0	0	0	-8.9	0	0	0	9												
STANDBY	0	0	0	0.4	0	0	0	0.4												

Ref No.	Q2052																			
MODE	1	2	3	4	5	6														
CD PLAY	0	-6	0	0	-6	0														
STANDBY	0	0.3	0	0	0.3	0														
Ref No.	Q2502																			
MODE	1	2	3	4	5	6														
CD PLAY	0	-6	0	0	-6	0														
STANDBY	0	0.7	0	0	0.7	0														
Ref No.	Q2366																			
MODE	1	2	3	4	5	6														
CD PLAY	0	-6	0	0	-6	0														
STANDBY	0	0.7	0	0	0.7	0														
Ref No.	Q2051				Q2142				Q2143				Q2242				Q2243			
MODE	E	C	B		E	C	B		E	C	B		E	C	B		E	C	B	
CD PLAY	5.1	-6	4.6		0	0	0		0	0	-6		0	0	0		0	0	-6	
STANDBY	0	0.3	0		0	0	0		0	0	0.6		0	0	0		0	0	0.6	
Ref No.	Q2501				Q2551				Q2552				Q2576				Q2601			
MODE	E	C	B		E	C	B		E	C	B		E	C	B		E	C	B	
CD PLAY	0	-6	0		16.1	-3.9	16.1		4.4	5.2	5.2		0	5.4	-3.9		0	0	0	
STANDBY	1.4	0.9	0		17.8	0.4	17.8		0	0	0		0	0.7	0.4		0	0	0	
Ref No.	Q2606				Q2806				Q2901				Q2912				Q2913			
MODE	E	C	B		E	C	B		E	C	B		E	C	B		E	C	B	
CD PLAY	15.4	0	15.5		0	5.4	0		0	0	4.9		0	0	4.3		0	12	0	
STANDBY	0	0	0		0	5.4	0		0	0	0		0	0	0		0	0.3	0	
Ref No.	Q2914				Q2978				Q2979											
MODE	E	C	B		E	C	B		E	C	B									
CD PLAY	12	0	12		5	0	5.1		5	0	5.3									
STANDBY	0.3	0	0		0.3	0	0		0	0	0.2									

15.3. Panel P.C.B. & Power P.C.B. & Transformer P.C.B.

PANEL P.C.B

Ref No.	IC6801																			
MODE	1	2	3	4	5	6	7	8	9	10	11	12	13	14	15	16	17	18	19	20
CD PLAY	0	0	0	0	2.3	1.6	1.2	4.1	4.8	3.9	0	0	5	-16.5	-29.5	-24.5	-27.5	-27	-24.4	-19.2
STANDBY	0	0	0	0	0	0	0	0	0	0	0	0	0.2	-29.1	-28.9	-28.8	-28.7	-28.7	-28.6	-28.6
Ref No.	IC6801																			
MODE	21	22	23	24	25	26	27	28	29	30	31	32	33	34	35	36	37	38	39	40
CD PLAY	-21.9	-13.9	-16.5	-29.7	-27.1	-29.7	-21.9	-27.1	-27.1	-30.3	-30	-27.4	-27.4	-27.4	-27.4	-27.4	-27.4	-27.4	-27.4	-27.4
STANDBY	-28.6	-28.5	-28.5	-28.4	-28.4	-28.3	-28.3	-28.2	-28.2	-28.2	-27.8	-27.7	-27.6	-27.7	-27.6	-27.6	-27.5	-27.4	-27.4	-27.3
Ref No.	IC6801																			
MODE	41	42	43	44																
CD PLAY	-27.4	-27.4	5	0																
STANDBY	-27.3	-27.3	0.2	0	`															
Ref No.	Q6411				Q6415				Q6421				Q6425				Q6803			
MODE	E	C	B		E	C	B		E	C	B		E	C	B		E	C	B	
CD PLAY	12	0	11.9		11.9	0	11.9		0	11.9	0		0	11.9	0		5.4	5.4	4.6	
STANDBY	0.3	0	0.3		0.3	0	0.3		0	0.3	0		0	0.3	0		5.4	5.4	4.7	
Ref No.	Q6804				Q6805															
MODE	E	C	B		E	C	B													
CD PLAY	0	5.3	4.6		0	0	5.3													
STANDBY	5.4	0	5.4		0	5.2	0													

POWER P.C.B

Ref No.	IC5301																			
MODE	1	2	3	4	5	6	7	8	9	10	11	12	13	14	15	16	17	18	19	20
CD PLAY	-25.9	0	0	28	0	-28.9	-20.7	28.6	11	0	-29	0	-29.1	-0.2	10.9	28.5	-28.9	-28.9	0	28.1
STANDBY	0	0	0	0	0	0	0	0	0	0	0	0	0	0	0	0	0	0	0	0
Ref No.	IC5301																			
MODE	21	22	23																	
CD PLAY	0	0	4.6																	
STANDBY	0	0	0.1																	
Ref No.	Q5101				Q5102				Q5103				Q5104				Q5108			
MODE	E	C	B		E	C	B		E	C	B		E	C	B		E	C	B	
CD PLAY	28.5	42.8	32		0	-29.2	-39.7		0	5.4	0.1		0.1	5.4	0		-43.1	-39.6	-42.4	
STANDBY	0	0	8		-0.8	0	0		0	0.8	0.3		0.3	0.8	0		-0.8	0	0	
Ref No.	Q5109				Q5110				Q5111				Q5112				Q5113			
MODE	E	C	B		E	C	B		E	C	B		E	C	B		E	C	B	
CD PLAY	-4.6	-12.6	-5.2		27.9	32.1	28.6		15.5	27.4	16.1		16.3	12	15.6		16.3	15.6	16.2	
STANDBY	-0.1	-0.8	0		0.1	7.9	0		0	0	0		0.3	0.4	0.3		0.2	0.2	0.2	
Ref No.	Q5114				Q5115				Q5150				Q5151				Q5152			
MODE	E	C	B		E	C	B		E	C	B		E	C	B		E	C	B	
CD PLAY	11.2	15.7	11.8		5	5.7	8.6		4.7	0	5.3		4.7	0	5.4		0	4.5	0	
STANDBY	0	0	0.2		0.3	0	0		0.1	0	0		0.1	0	0		0	0	0.8	
Ref No.	Q5603				Q5604				Q5707				Q5708				Q5709			
MODE	E	C	B		E	C	B		E	C	B		E	C	B		E	C	B	
CD PLAY	-29	-29	-2.6		0	-2.6	0		9	13.3	9.6		0	-9.4	-0.6		-8.9	-25.2	-9.4	
STANDBY	0	0	0		0	0	0		0.4	0	0		0	0	0.4		0.4	0	0	

TRANSFORMER P.C.B

Ref No.	Q5950				Q5951				Q5952				Q5953							
MODE	E	C	B		E	C	B		E	C	B		E	C	B					
CD PLAY	6.2	10.3	6.8		-30.3	-47.5	0		0	3.7	-0.3		0	0.1	0					
STANDBY	0	6.8	0		-29.1	-29.4	0		0	3.7	0		0	6.2	0					

15.4. Deck P.C.B. & Deck Mechanism P.C.B. & Mic P.C.B. & Tuner P.C.B.

DECK P.C.B

Ref No.	IC1001																			
MODE	1	2	3	4	5	6	7	8	9	10	11	12	13	14	15	16	17	18	19	20
CD PLAY	0	0	0.6	5.5	5.5	2.8	0	0.3	0	1.9	7.2	0	11.3	0	0	0	0.3	0	0.2	5.4
STANDBY			0.4	0.4	0.2	0.2	0	0	0	0	0	0	0	0	0	0	0.3	0	0.2	0.1

Ref No.	IC1001																			
MODE	21	22	23	24																
CD PLAY	6.3	0.7	0	0																
STANDBY	0.3	0.3	0	0																

Ref No.	IC1004																			
MODE	1	2	3	4	5															
CD PLAY	7.9	0	0	0	0															
STANDBY	0	0	0	0	0															

Ref No.	Q1003				Q1004				Q1005				Q1017							
MODE	E	C	B		E	C	B		E	C	B		E	C	B					
CD PLAY	0	-0.1	0		0	15.3	0		0	15.3	0		0	11.6	-0.6					
STANDBY	0	0	0		0	0	0		0	0	0		0	0	0					

DECK MECHANISM P.C.B

Ref No.	IC951																			
MODE	1	2	3	4																
CD PLAY	0.7	5	4.2	5.3																
STANDBY	0	0	0	0																

MIC P.C.B

Ref No.	Q2701				Q2702															
MODE	E	C	B		E	C	B													
CD PLAY	6.1	8.3	6.5		0	1.6	0.7													
STANDBY	0	0.2	0.2		0	0.2	0.2													

TUNER P.C.B

Ref No.	Q1				Q2				Q3				Q4							
MODE	G	D	S		E	C	B		E	C	B		E	C	B					
CD PLAY	0	0	0		0	0	0		0	0	0		0	0	0					
STANDBY	0	0	0		0	0	0		0	0	0		0	0	0					

15.5. Waveform Chart

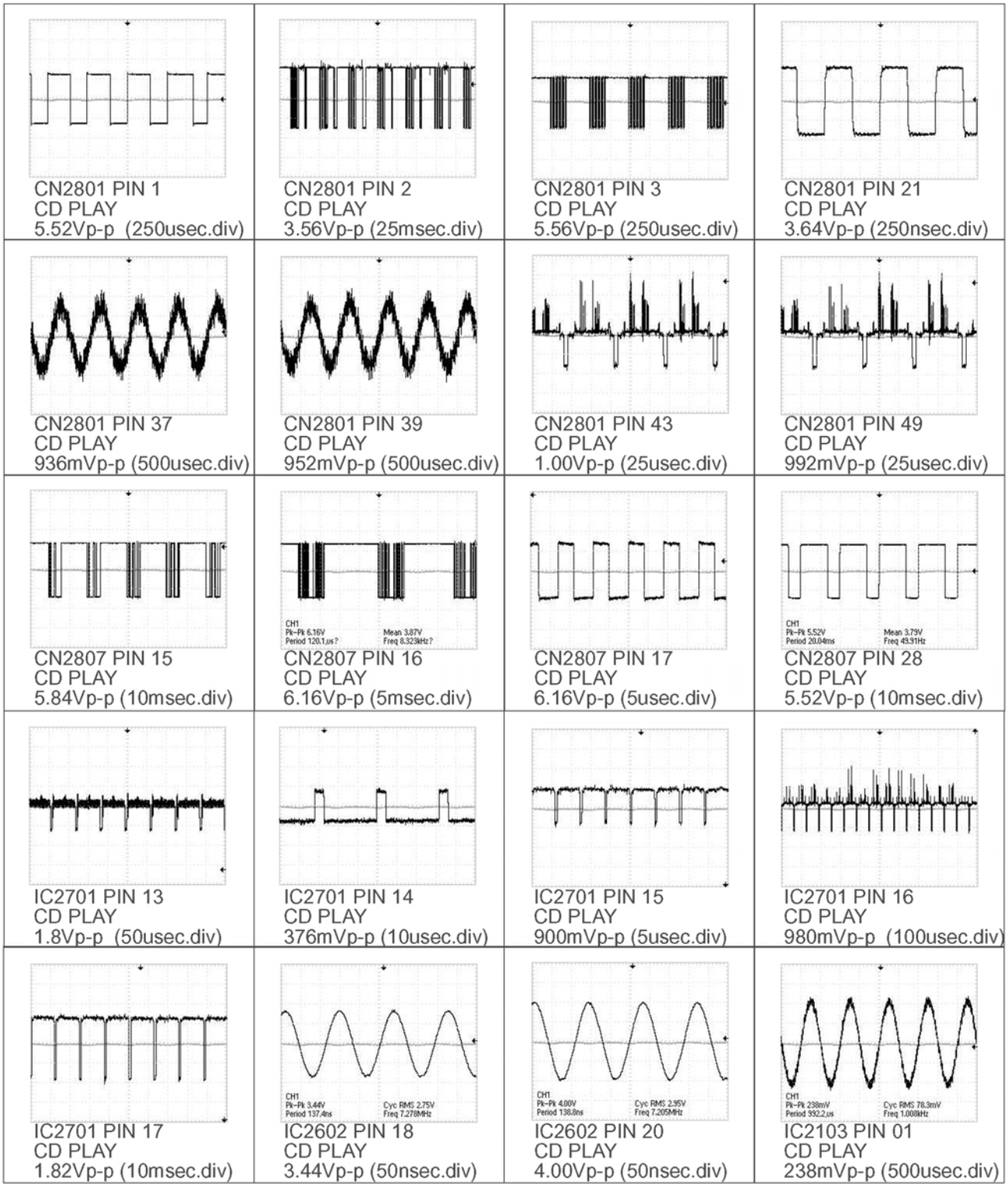

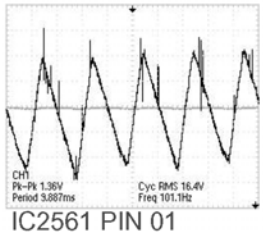

IC2561 PIN 01
CD PLAY
1.36Vp-p (5msec.div)

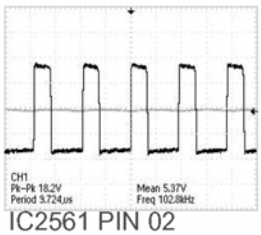

IC2561 PIN 02
CD PLAY
18.2Vp-p (5usec.div)

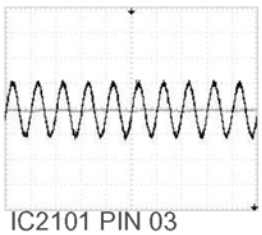

IC2101 PIN 03
CD PLAY
236mVp-p (1msec.div)

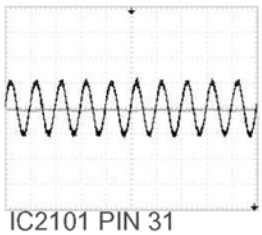

IC2101 PIN 31
CD PLAY
236mVp-p (1msec.div)

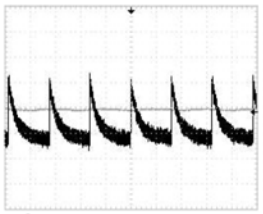

IC2801 PIN 01
CD PLAY
304mVp-p (1msec.div)

IC2801 PIN 06
CD PLAY
344mVp-p (250nsec.div)

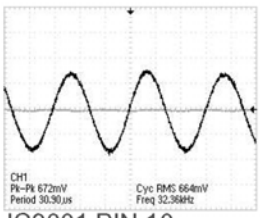

IC2801 PIN 10
CD PLAY
672mVp-p (10usec.div)

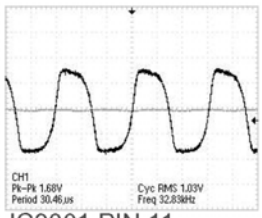

IC2801 PIN 11
CD PLAY
1.68Vp-p (10usec.div)

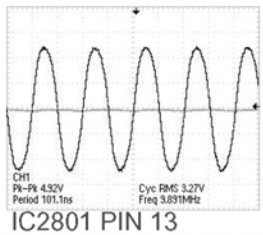

IC2801 PIN 13
CD PLAY
4.92Vp-p (50nsec.div)

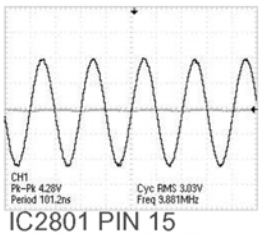

IC2801 PIN 15
CD PLAY
4.28Vp-p (50nsec.div)

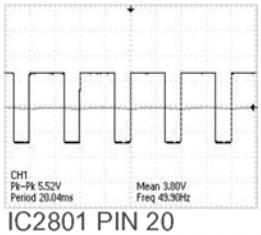

IC2801 PIN 20
CD PLAY
5.52Vp-p (10msec.div)

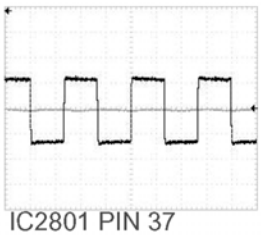

IC2801 PIN 37
CD PLAY
5.44Vp-p (10usec.div)

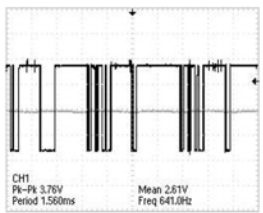

IC2801 PIN 35
CD PLAY
3.76Vp-p (10msec.div)

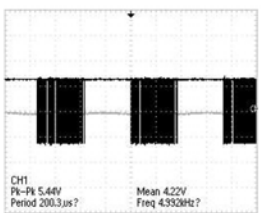

IC2801 PIN 36
CD PLAY
5.44Vp-p (10msec.div)

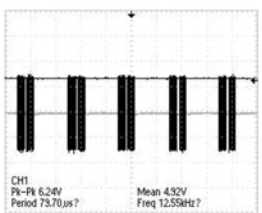

IC2801 PIN 74
CD PLAY
6.24Vp-p (10msec.div)

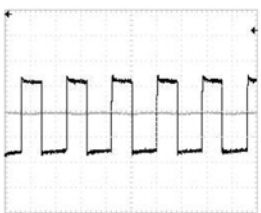

IC2801 PIN 73
CD PLAY
3.20Vp-p (5usec.div)

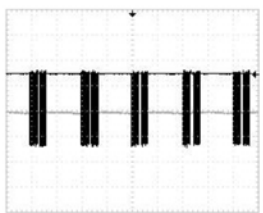

IC2801 PIN 72
CD PLAY
6.08Vp-p (10msec.div)

16 Wiring Connection Diagram

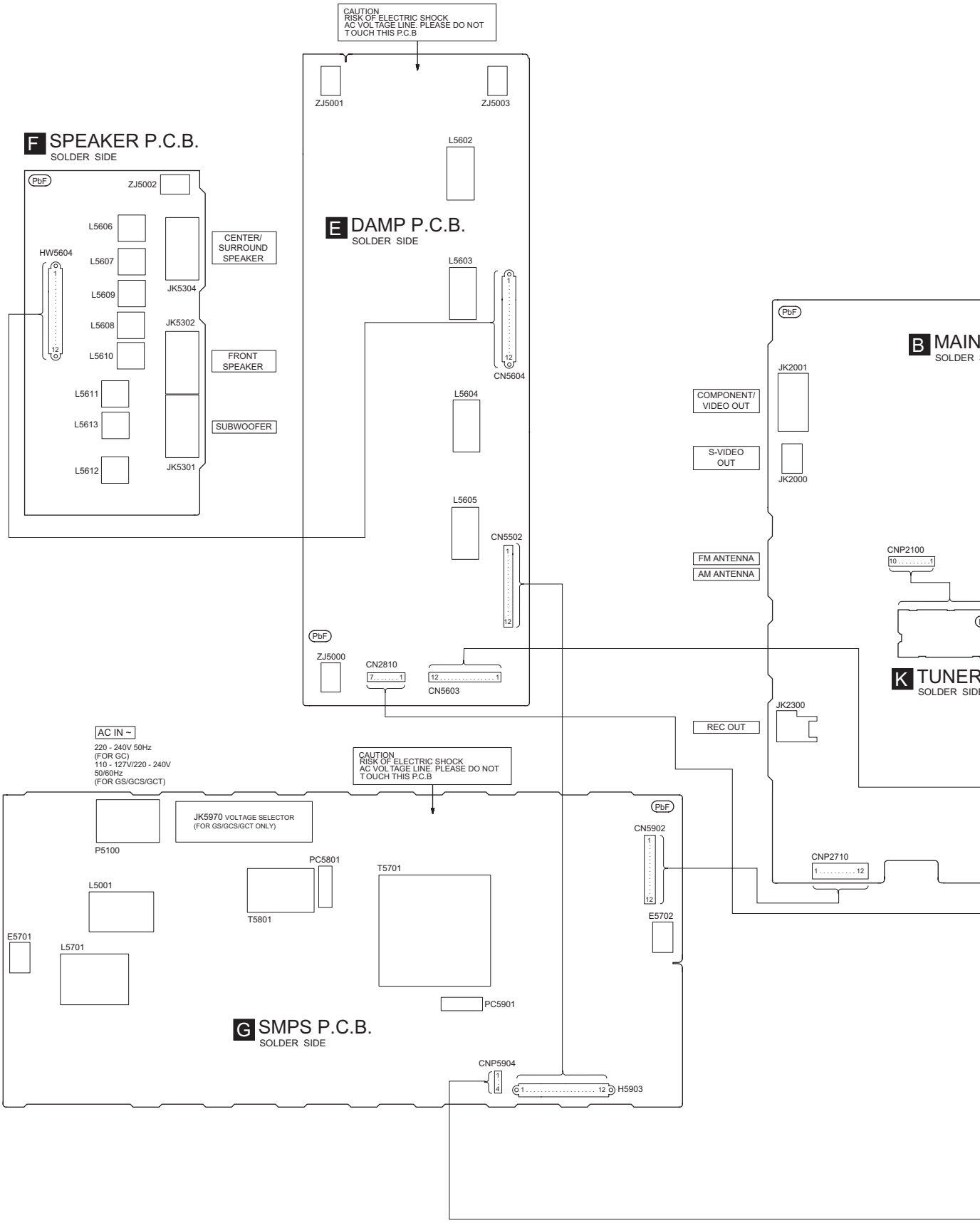

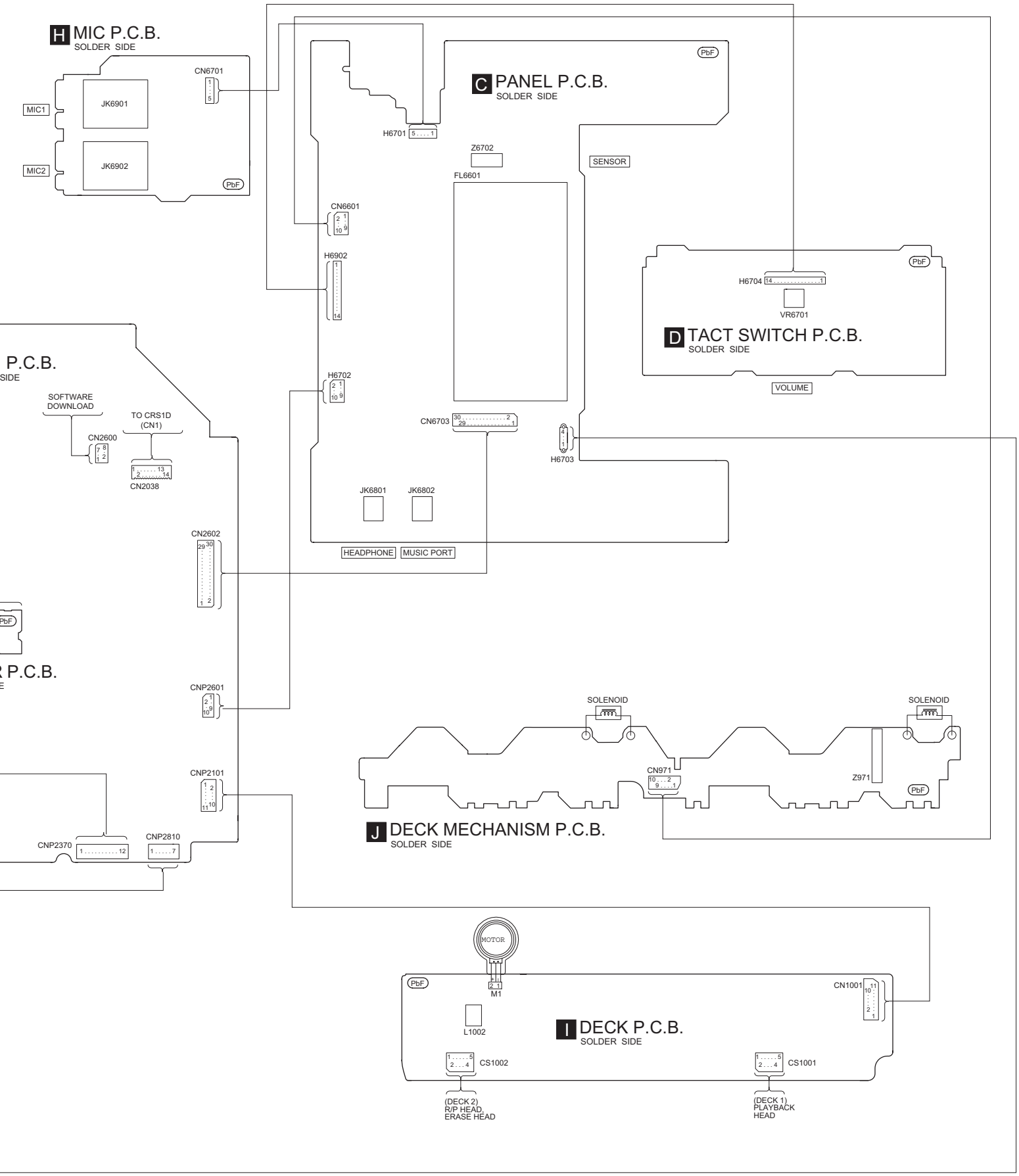
H MIC P.C.B.
SOLDER SIDE
CN6701
MIC1
MIC2
JK6901
JK6902
PbF
C PANEL P.C.B.
SOLDER SIDE
H6701
Z6702
FL6601
SENSOR
CN6601
H6902
H6702
CN6703
JK6801
JK6802
HEADPHONE
MUSIC PORT
H6703
H6704
VR6701
D TACT SWITCH P.C.B.
SOLDER SIDE
VOLUME
SOFTWARE DOWNLOAD
TO CRS1D (CN1)
CN2600
CN2038
CN2602
CNP2601
CNP2101
CNP2370
CNP2810
SOLENOID
SOLENOID
CN971
Z971
J DECK MECHANISM P.C.B.
SOLDER SIDE
MOTOR
M1
L1002
I DECK P.C.B.
SOLDER SIDE
CN1001
CS1002
CS1001
(DECK 2) R/P HEAD ERASE HEAD
(DECK 1) PLAYBACK HEAD

17 Block Diagram

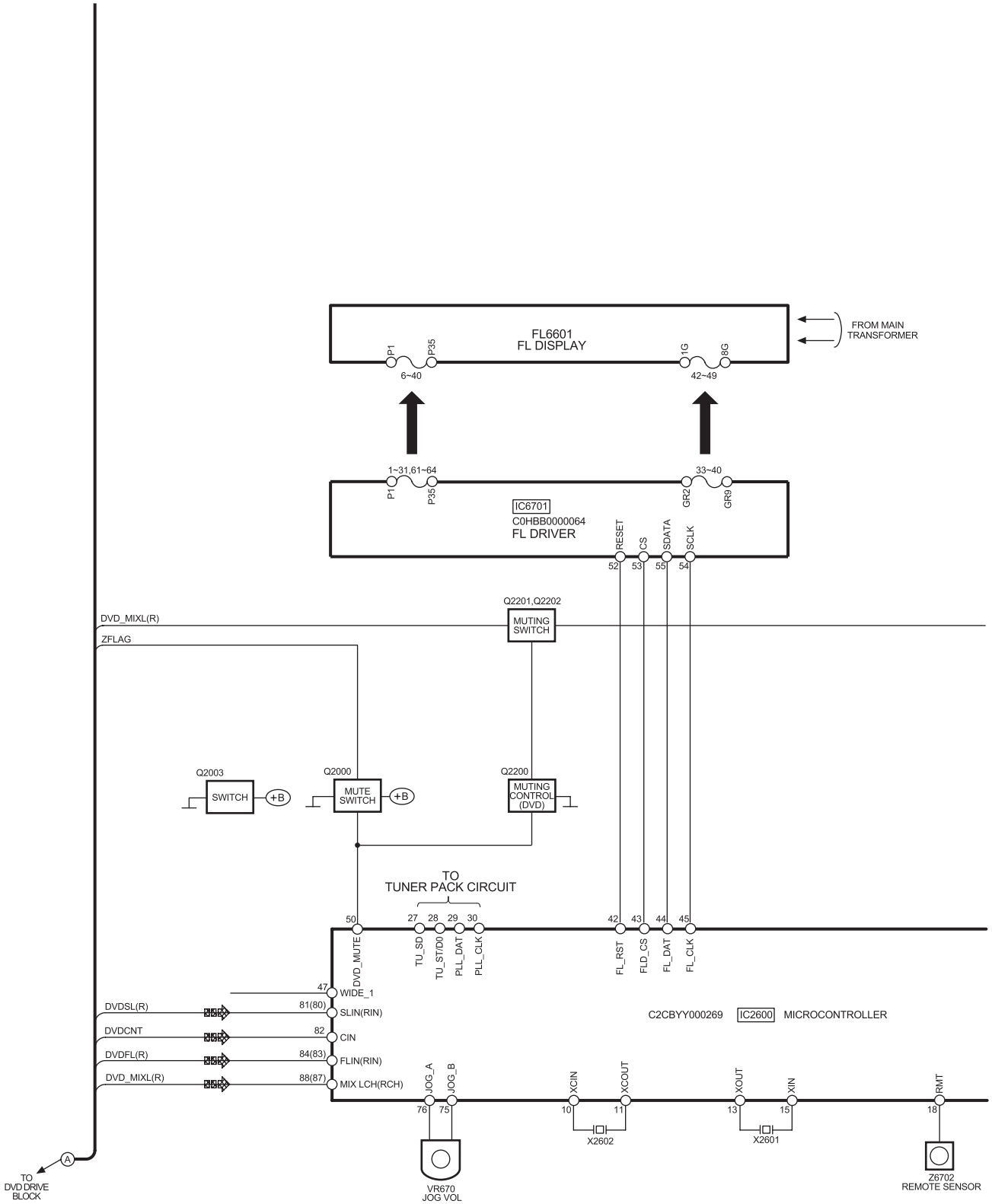

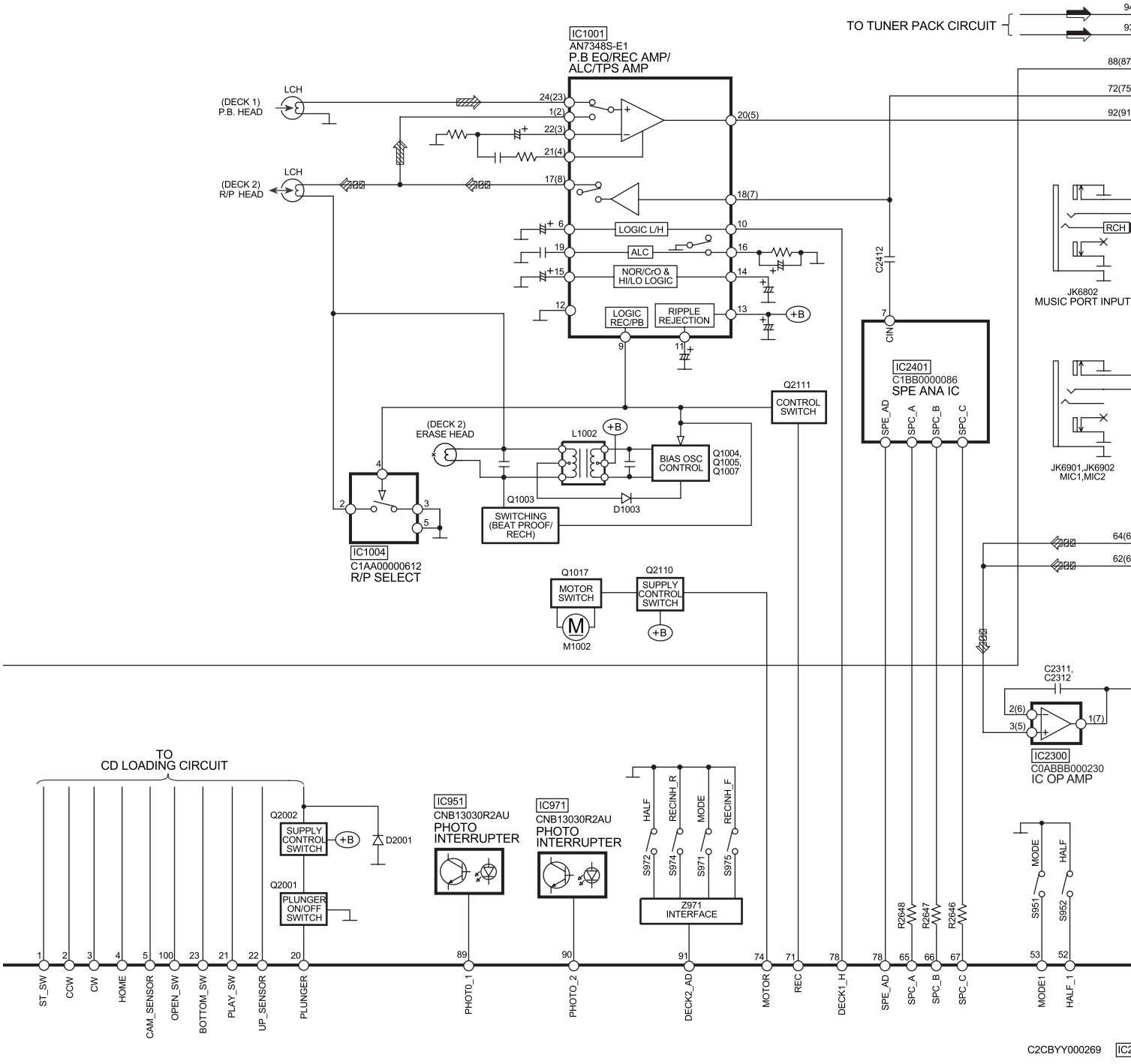
TO TUNER PACK CIRCUIT
IC1001
AN7348S-E1
P.B EQ/REC AMP/
ALC/TPS AMP
(DECK 1)
P.B. HEAD
LCH
(DECK 2)
R/P HEAD
LCH
LOGIC L/H
ALC
NOR/CrO &
HI/LO LOGIC
LOGIC
REC/PB
RIPPLE
REJECTION
+B
RCH
JK6802
MUSIC PORT INPUT
C2412
CIN
IC2401
C1BB0000086
SPE ANA IC
SPE_AD
SPC_A
SPC_B
SPC_C
JK6901,JK6902
MIC1,MIC2
Q2111
CONTROL
SWITCH
(DECK 2)
ERASE HEAD
L1002
BIAS OSC
CONTROL
Q1004,
Q1005,
Q1007
Q1003
D1003
SWITCHING
(BEAT PROOF/
RECH)
IC1004
C1AA00000612
R/P SELECT
Q1017
MOTOR
SWITCH
M1002
Q2110
SUPPLY
CONTROL
SWITCH
C2311,
C2312
IC2300
C0ABBB000230
IC OP AMP
TO
CD LOADING CIRCUIT
Q2002
SUPPLY
CONTROL
SWITCH
D2001
Q2001
PLUNGER
ON/OFF
SWITCH
IC951
CNB13030R2AU
PHOTO
INTERRUPTER
IC971
CNB13030R2AU
PHOTO
INTERRUPTER
HALF
RECINH_R
MODE
RECINH_F
S972
S974
S971
S975
Z971
INTERFACE
R2648
R2647
R2646
S951
S952
MODE
HALF
ST_SW
CCW
CW
HOME
CAM_SENSOR
OPEN_SW
BOTTOM_SW
PLAY_SW
UP_SENSOR
PLUNGER
PHOTO_1
PHOTO_2
DECK2_AD
MOTOR
REC
DECK1_H
SPE_AD
SPC_A
SPC_B
SPC_C
MODE1
HALF_1
C2CBYY000269

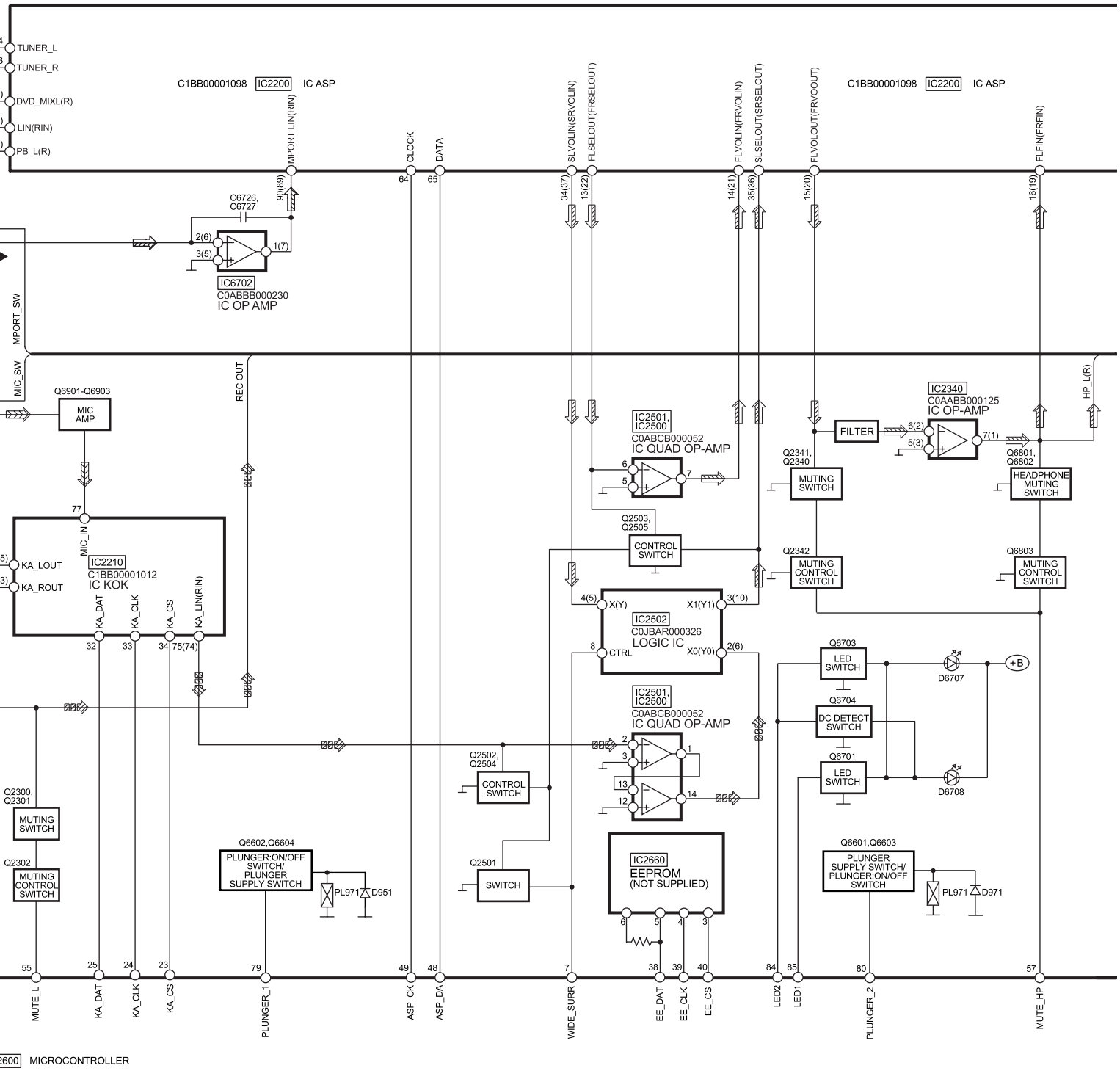
TUNER_L
TUNER_R
DVD_MIXL(R)
LIN(RIN)
PB_L(R)
C1BB00001098 IC2200 IC ASP
MPORT LIN(RIN)
CLOCK
DATA
SLVOLIN(SRVOLIN)
FLSELOUT(FRSELOUT)
FLVOLIN(FRVOLIN)
SLSELOUT(SRSELOUT)
FLVOLOUT(FRVOOUT)
C1BB00001098 IC2200 IC ASP
FLFIN(FRFIN)
C6726, C6727
IC6702
C0ABBB000230
IC OP AMP
MPORT_SW
MIC_SW
REC OUT
Q6901-Q6903
MIC AMP
MIC_IN
IC2210
C1BB00001012
IC KOK
KA_LOUT
KA_ROUT
KA_DAT
KA_CLK
KA_CS
KA_LIN(RIN)
IC2501, IC2500
C0ABCB000052
IC QUAD OP-AMP
Q2503, Q2505
CONTROL SWITCH
IC2502
C0JBAR000326
LOGIC IC
X(Y)
X1(Y1)
X0(Y0)
CTRL
IC2340
C0AABB000125
IC OP-AMP
FILTER
HP_L(R)
Q2341, Q2340
MUTING SWITCH
Q2342
MUTING CONTROL SWITCH
Q6801, Q6802
HEADPHONE MUTING SWITCH
Q6803
MUTING CONTROL SWITCH
Q6703
LED SWITCH
Q6704
DC DETECT SWITCH
Q6701
LED SWITCH
D6707
D6708
+B
Q2502, Q2504
CONTROL SWITCH
Q2501
SWITCH
IC2660
EEPROM
(NOT SUPPLIED)
Q2300, Q2301
MUTING SWITCH
Q2302
MUTING CONTROL SWITCH
Q6602,Q6604
PLUNGER:ON/OFF SWITCH/ PLUNGER SUPPLY SWITCH
PL971
D951
Q6601,Q6603
PLUNGER SUPPLY SWITCH/ PLUNGER:ON/OFF SWITCH
PL971
D971
MUTE_L
KA_DAT
KA_CLK
KA_CS
PLUNGER_1
ASP_CK
ASP_DA
WIDE_SURR
EE_DAT
EE_CLK
EE_CS
LED2
LED1
PLUNGER_2
MUTE_HP
2600 MICROCONTROLLER

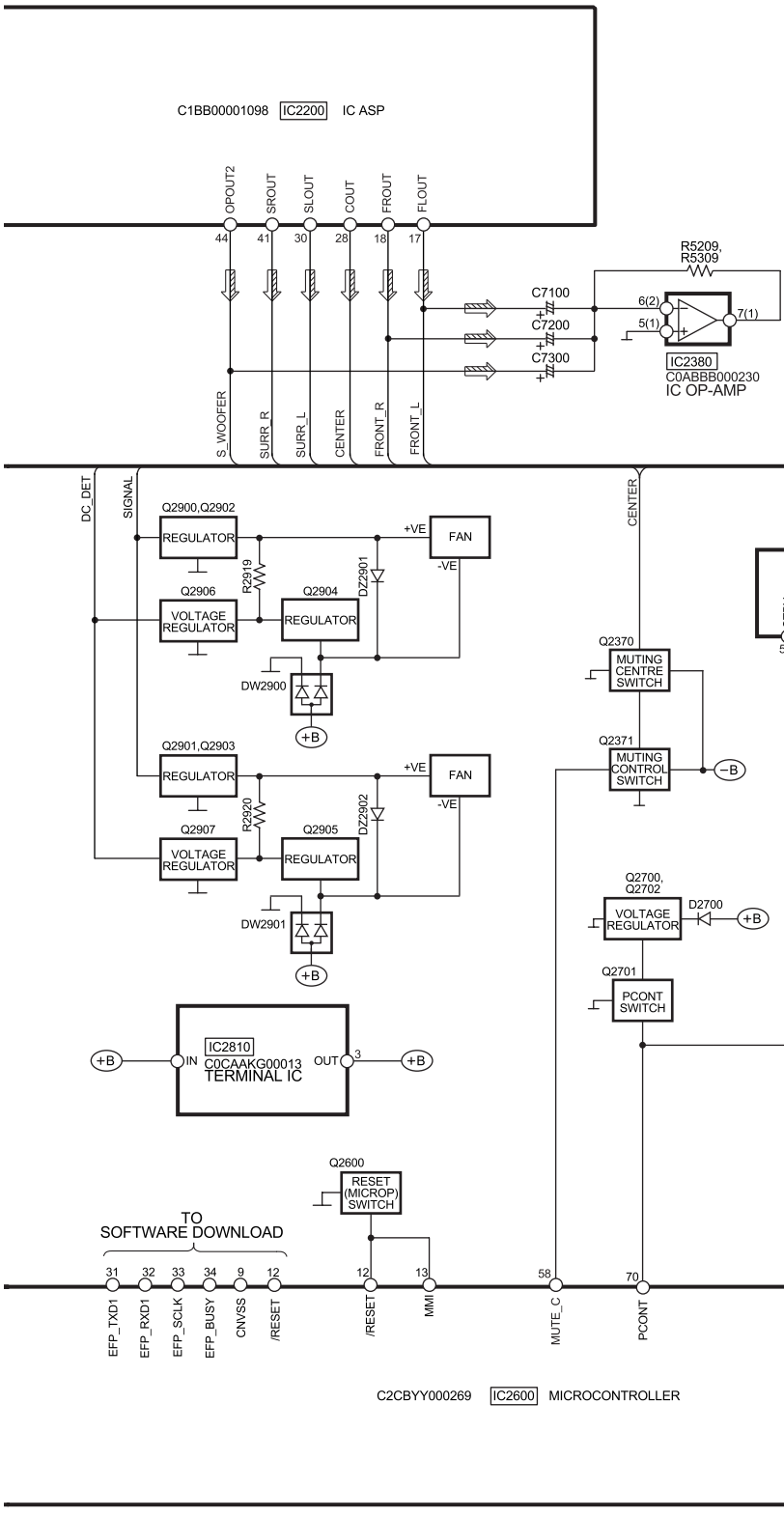
C1BB00001098 IC2200 IC ASP
OPOUT2
SROUT
SLOUT
COUT
FROUT
FLOUT
44
41
30
28
18
17
R5209,
R5309
C7100
C7200
C7300
6(2)
5(1)
7(1)
IC2380
C0ABBB000230
IC OP-AMP
S_WOOFER
SURR_R
SURR_L
CENTER
FRONT_R
FRONT_L
DC_DET
SIGNAL
CENTER
Q2900,Q2902
REGULATOR
+VE
FAN
-VE
R2919
DZ2901
Q2906
VOLTAGE REGULATOR
Q2904
REGULATOR
DW2900
+B
Q2901,Q2903
REGULATOR
+VE
FAN
-VE
R2920
DZ2902
Q2907
VOLTAGE REGULATOR
Q2905
REGULATOR
DW2901
+B
Q2370
MUTING CENTRE SWITCH
Q2371
MUTING CONTROL SWITCH
−B
Q2700, Q2702
VOLTAGE REGULATOR
D2700
+B
Q2701
PCONT SWITCH
IC2810
C0CAAKG00013
TERMINAL IC
+B
IN
OUT
3
+B
Q2600
RESET (MICROP) SWITCH
TO SOFTWARE DOWNLOAD
31
32
33
34
9
12
12
13
58
70
EFP_TXD1
EFP_RXD1
EFP_SCLK
EFP_BUSY
CNVSS
/RESET
/RESET
MMI
MUTE_C
PCONT
C2CBYY000269 IC2600 MICROCONTROLLER

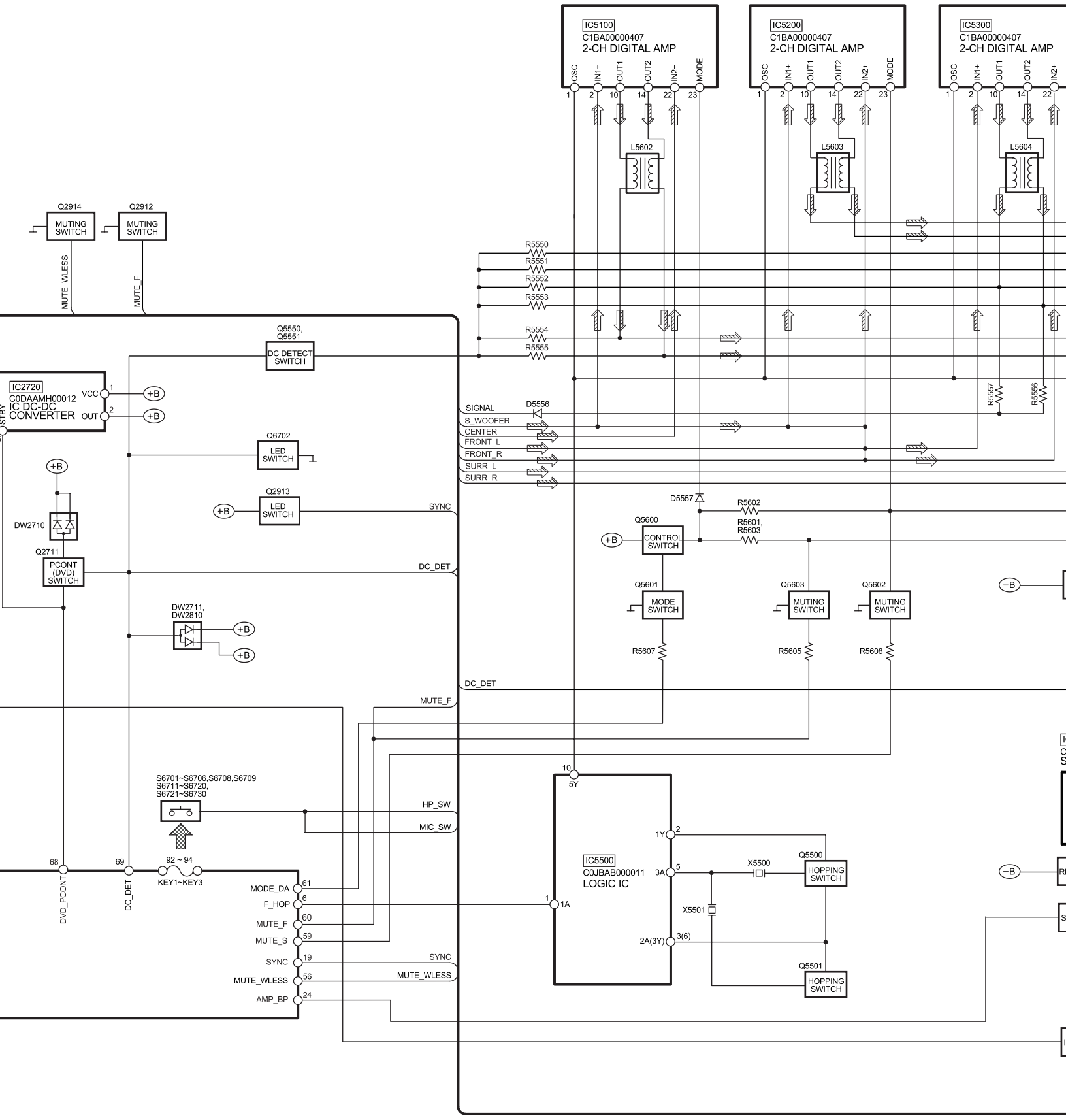
IC5100
C1BA00000407
2-CH DIGITAL AMP
IC5200
C1BA00000407
2-CH DIGITAL AMP
IC5300
C1BA00000407
2-CH DIGITAL AMP
OSC
IN1+
OUT1
OUT2
IN2+
MODE
L5602
L5603
L5604
Q2914
Q2912
MUTING SWITCH
MUTE_WLESS
MUTE_F
R5550
R5551
R5552
R5553
R5554
R5555
Q5550, Q5551
DC DETECT SWITCH
IC2720
C0DAAMH00012
IC DC-DC CONVERTER
VCC
OUT
+B
STBY
Q6702
LED SWITCH
Q2913
SYNC
DW2710
Q2711
PCONT (DVD) SWITCH
DC_DET
DW2711, DW2810
SIGNAL
S_WOOFER
CENTER
FRONT_L
FRONT_R
SURR_L
SURR_R
D5556
R5557
R5556
D5557
R5602
Q5600
CONTROL SWITCH
R5601, R5603
Q5601
MODE SWITCH
Q5603
MUTING SWITCH
Q5602
MUTING SWITCH
R5607
R5605
R5608
−B
S6701~S6706,S6708,S6709
S6711~S6720,
S6721~S6730
HP_SW
MIC_SW
92 ~ 94
KEY1~KEY3
68
69
DVD_PCONT
DC_DET
MODE_DA
F_HOP
MUTE_F
MUTE_S
SYNC
MUTE_WLESS
AMP_BP
61
6
60
59
19
56
24
IC5500
C0JBAB000011
LOGIC IC
10
5Y
1Y
2
3A
5
1
1A
2A(3Y)
3(6)
X5500
X5501
Q5500
HOPPING SWITCH
Q5501
HOPPING SWITCH

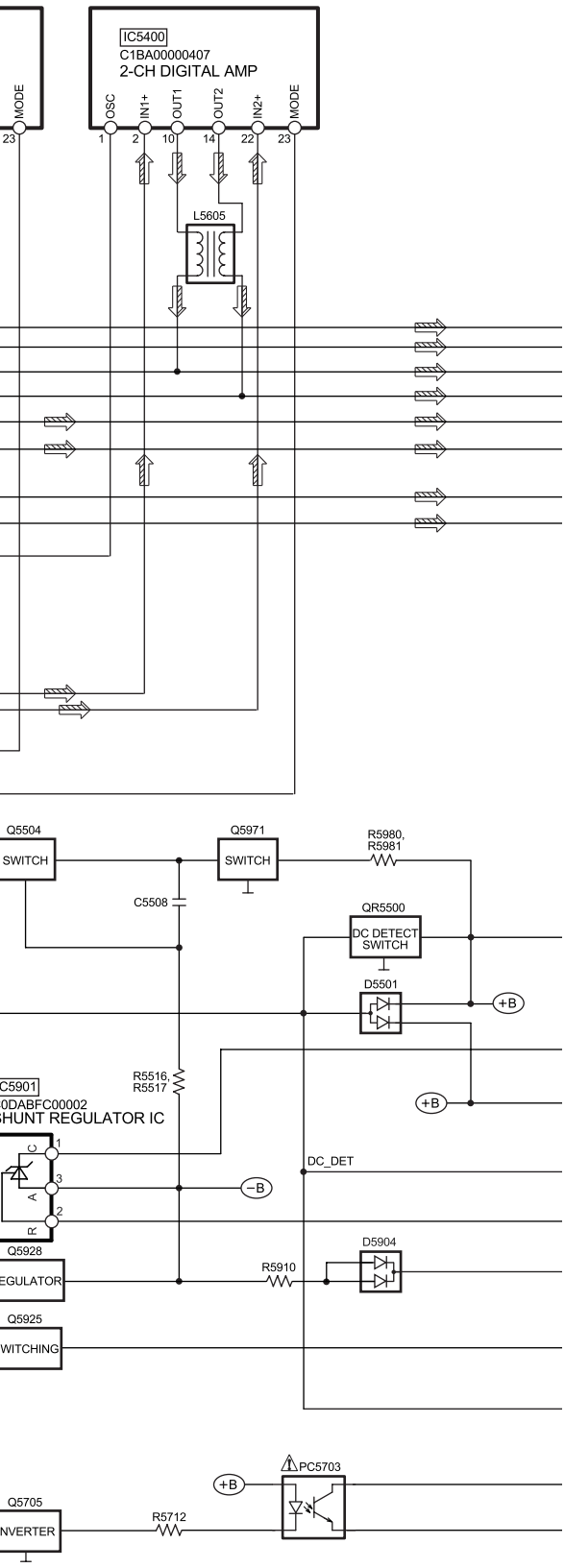
IC5400
C1BA00000407
2-CH DIGITAL AMP
OSC
IN1+
OUT1
OUT2
IN2+
MODE
1
2
10
14
22
23
L5605
Q5504
SWITCH
Q5971
SWITCH
R5980,
R5981
C5508
QR5500
DC DETECT
SWITCH
D5501
+B
R5516,
R5517
C5901
SHUNT REGULATOR IC
DC_DET
−B
D5904
R5910
Q5928
Q5925
PC5703
Q5705
R5712

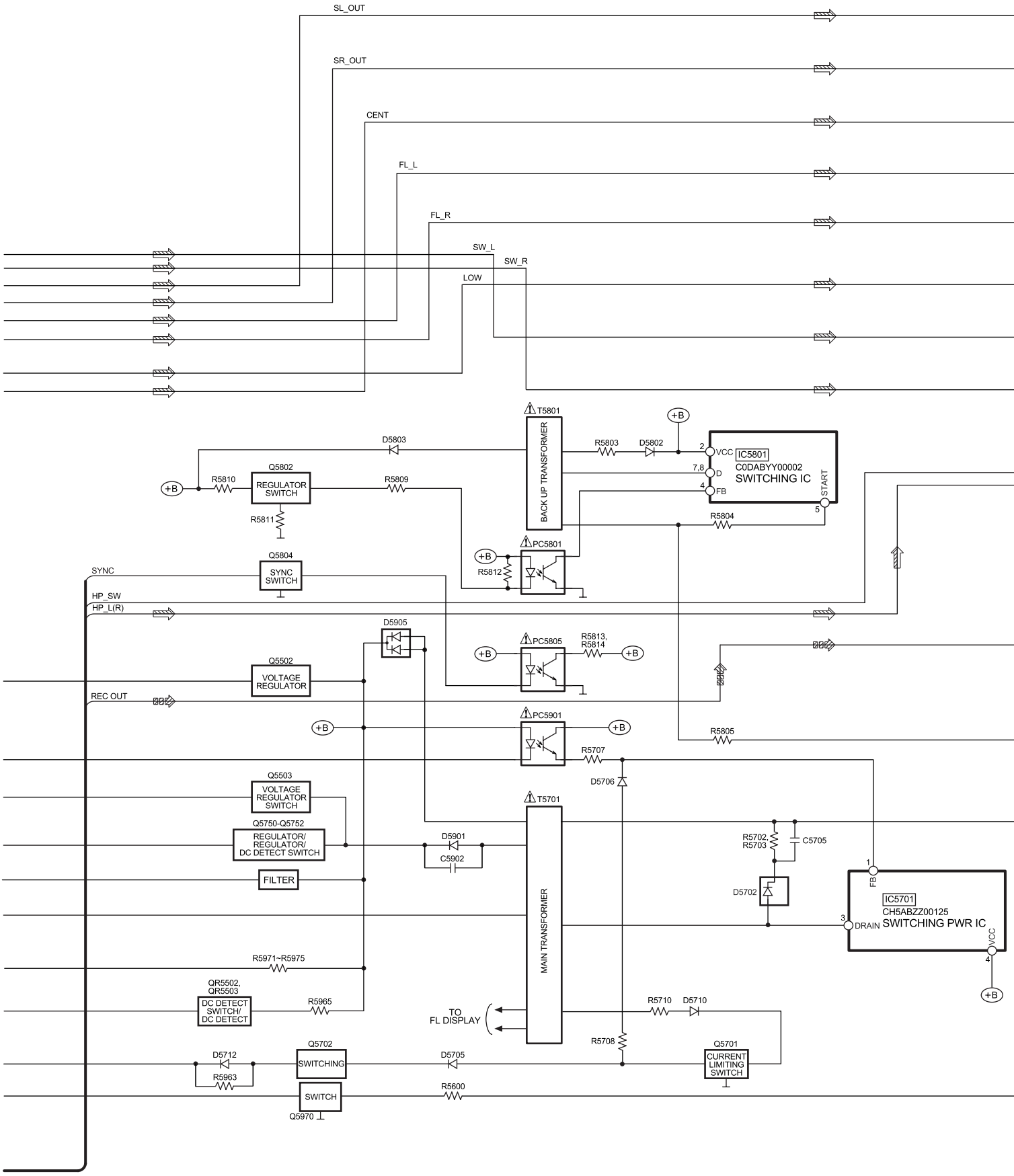
SL_OUT
SR_OUT
CENT
FL_L
FL_R
SW_L
SW_R
LOW
T5801
BACK UP TRANSFORMER
D5803
R5803
D5802
+B
IC5801
C0DABYY00002
SWITCHING IC
VCC
D
FB
START
R5804
R5810
Q5802
REGULATOR SWITCH
R5809
R5811
PC5801
R5812
Q5804
SYNC SWITCH
SYNC
HP_SW
HP_L(R)
D5905
PC5805
R5813, R5814
Q5502
VOLTAGE REGULATOR
REC OUT
PC5901
R5805
R5707
D5706
Q5503
VOLTAGE REGULATOR SWITCH
Q5750-Q5752
REGULATOR/ REGULATOR/ DC DETECT SWITCH
D5901
C5902
FILTER
T5701
MAIN TRANSFORMER
R5702, R5703
C5705
D5702
IC5701
CH5ABZZ00125
SWITCHING PWR IC
DRAIN
R5971~R5975
QR5502, QR5503
DC DETECT SWITCH/ DC DETECT
R5965
TO FL DISPLAY
R5710
D5710
R5708
Q5701
CURRENT LIMITING SWITCH
D5712
R5963
Q5702
SWITCHING
D5705
SWITCH
Q5970
R5600

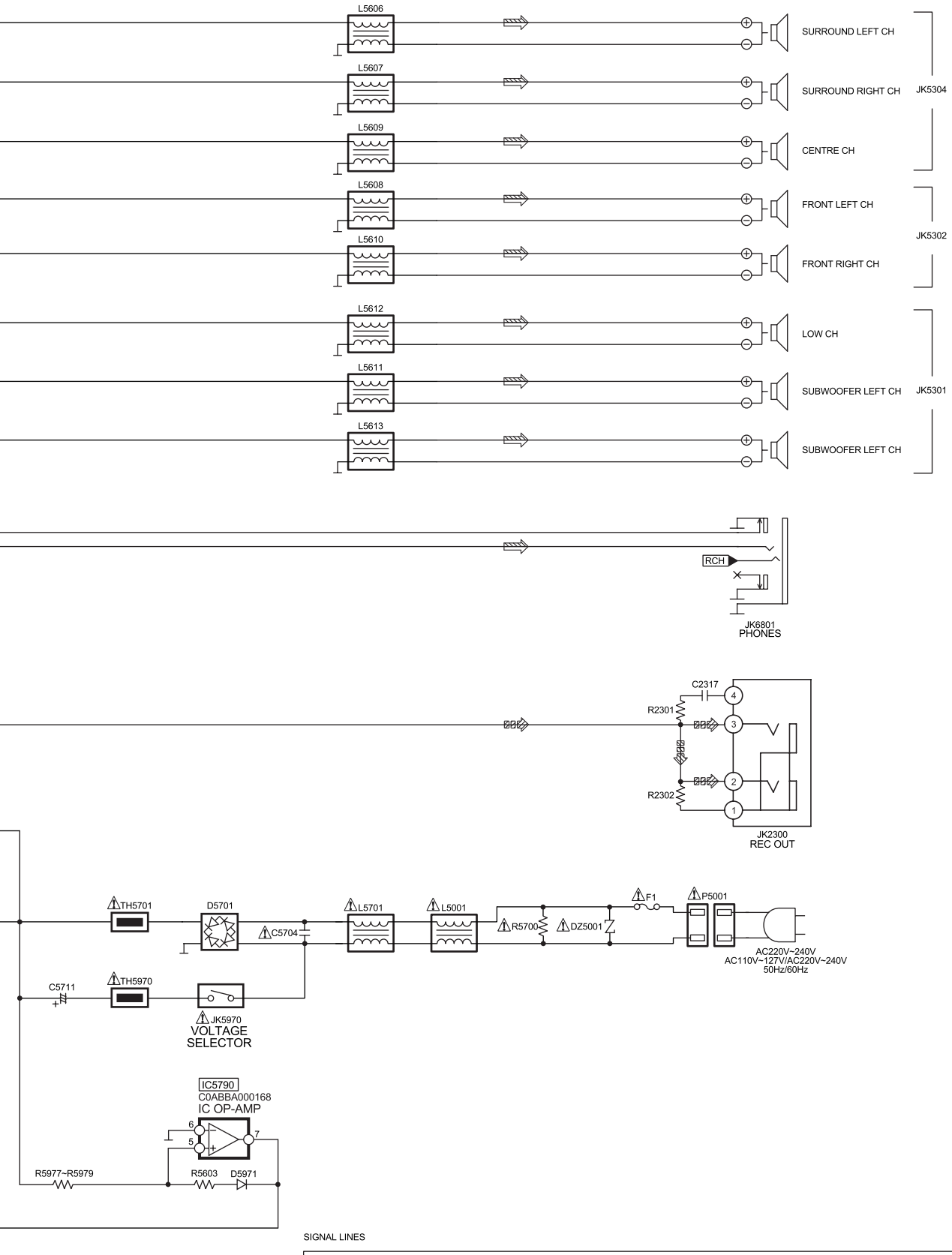

SIGNAL LINES

: MAIN SIGNAL LINE	: CD SIGNAL LINE	: AM SIGNAL LINE	: PLAYBACK SIGNAL LINE
: FM OSC SIGNAL LINE	: AM OSC SIGNAL LINE	: FM/AM SIGNAL LINE	: RECORD SIGNAL LINE
: FM SIGNAL LINE	: AUX SIGNAL LINE	: CD-DA (AUDIO/VIDEO) SIGNAL LINE	: MIC SIGNAL LINE

( ) Indicates the Pin No. of Right Channel.

NOTE : Signal Lines are applicable to the Left Channel only.

18 Notes of Schematic Diagrams

(All schematic diagrams may be modified at any time with the development of the new technology)

S951 : MODE Switch
S952 : HALF Switch
S971 : MODE Switch
S972 : HALF Switch
S974 : RECINH_R Switch
S975 : RECINH_F Switch
S6701 : POWER Switch
S6702 : SURR ENHANCER Switch
S6703 : SUPER SURR Switch
S6704 : SUPER SOUND EQ Switch
S6705 : SOUND EQ Switch
S6706 : SUB WOOFER Switch
S6708 : DECK1 Switch
S6709 : DECK2 Switch
S6711 : M.PORT Switch
S6712 : TUNER Switch
S6713 : DISPLAY Switch
S6714 : DECK1/2 Switch
S6715 : REC Switch
S6716 : TAPE Switch
S6717 : DVD/CD Switch
S6718 : FF Switch
S6719 : STOP Switch
S6720 : REW Switch
S6721 : OPEN/CLOSE Switch
S6722 : MULTI CHANGE Switch
S6723 : SINGLE CHANGE Switch
S6724 : DISC1 Switch
S6725 : DISC2 Switch
S6726 : DISC3 Switch
S6727 : DISC4 Switch
S6728 : DISC5 Switch
S6729 : MIC UP Switch
S6730 : MIC DOWN Switch
VR6701 : VR VOLUME JOG

- The voltage value and waveforms are the reference voltage of this unit measured by DC electronic voltmeter (high impedance) and oscilloscope on the basis of chassis. Accordingly, there may arise some error in voltage values and waveforms depending upon the internal impedance of the tester or the measuring unit.
- **Importance safety notice :**

  Components identified by ⚠ mark have special characteristics important for safety. Furthermore, special parts which have purposes of fire-retardant (resistors), high-quality sound (capacitors), low-noise (resistors), etc. are used. When replacing any of components, be sure to use only manufacturer´s specified parts shown in the parts list.

Caution !

IC, LSI and VLSI are sensitive to static electricity.

Secondary trouble can be prevented by taking care during repair.

- Cover the parts boxes made of plastics with aluminium foil.
- Put a conductive mat on the work table.
- Ground the soldering iron.
- Do not touch the pins of IC, LSI or VLSI with fingers directly.